General Instructions

Please retain product label and instructions for future reference

03DTSHPN0806FGD1TW-V1

DIP TREATED SHIPLAP PENT 8FT X 6FT FULLY GLAZED DOUBLE 1 TALL WINDOW

BEFORE YOU START PLEASE READ INSTRUCTIONS CAREFULLY
- Check the pack and make sure you have all the parts listed.
- When you are ready to start, make sure you have the right tools at hand (not supplied) including a Phillips screw-driver, Stanley knife, Wood saw, Step ladder, Hammer and a Drill with 2mm bit.
- Ensure there is plenty of space and a clean dry area for assembly.

LOCATION FOR YOUR GARDEN BUILDING
A minimum of 60cm should be left around the perimeter of your garden building to allow access for maintenance, annual treatment and to allow air flow around the building.

Where possible you should avoid placing your garden building underneath large trees to prevent the tree causing damage to the building.

TIMBER
As with all natural materials, timber can be affected during various weather conditions. For the duration of heavy or extended periods of rain, swelling of the wood panels may occur. Warping of the wood may also occur during excessive dry spells due to an interior moisture loss. Unfortunately, these processes cannot be avoided but can be helped. It is suggested that the outdoor building is sprayed with water during extended periods of warm sunshine and sheltered as much as possible during rain or snow.

Once your garden building has been installed it will need to be treated as soon as possible and annually to prevent the timber from deteriorating and to waterproof it. This is required to maintain the anti-rot guarantee.

Dip Treated buildings - Require a preservative treatment to protect against rot and decay and a waterproof treat-ment to prevent water ingress
Pressure Treated buildings - Require a waterproof treatment to prevent water ingress
Log Cabins - Are supplied untreated and require a preservative and waterproofing treatment.

BUILDING A BASE
When thinking about where the building and base is going to be constructed:
Ensure that there will be access to all sides for maintenance work and annual treatment.

Ensure the base is level and is built on firm ground, to prevent distortion. Refer to diagrams for the base dimensions, The base should be slightly smaller than the external measurement of the building, i.e. The cladding should overlap the base, creating a run off for water. It is also recommended that the floor be at least 25mm above the surrounding ground level to avoid flooding.

TYPES OF BASE
- Concrete 75mm laid on top of 75mm hard-core.
- Slabs laid on 50mm of sharp sand.

Whilst all products manufactured are made to the highest standards of Safety and in the case of childrens products independently tested to EN71 level, we cannot accept responsibility for your safety whilst erecting or using this product.

All buildings should be erected by two adults

Winter = High Moisture = Expansion
Summer = Low Moisture = Contraction

2mm Drill bit

For ease of assembly, you **MUST** pilot drill all screw holes and ensure all screw heads are countersunk.

CAUTION
Every effort has been made during the manufacturing process to eliminate the prospect of splinters on rough surfaces of the timber. You are strongly advised to wear gloves when working with or handling rough sawn timber.

For ease of assembly, you will need a tape measure to check dimensions of components.

To identify the fixings required for each step use a measuring tape.

****Protim Aquatan T5 (621)****

Your building has been dip treated with **Aquatan**.

Aquatan is a water-based concentrate which is diluted with water, the building has been treated by the correct application of Aquatan solution and then allowed to dry.

Aquatan is a decorative finish to colour the wood, which is applied industrially to timber fence panels and garden buildings.

Aquatan *undiluted* contains: boric acid, sodium hydroxide 32% solution, aqueos mixture of sodium dioctyl sulphosuccinat and alcohols: 2, 4, 6-trichlorophenol.

ANTI ROT GUARANTEE 10 YEARS ANTI ROT GUARANTEE

REGISTER FOR YOUR
ANTI-ROT
GUARANTEE TODAY

PLEASE SCAN HERE:

For assistance please contact customer care on: 01636 821215
Mercia Garden Products Limited,
Sutton On Trent,
Newark,
Nottinghamshire,
NG23 6QN

www.merciagardenproducts.co.uk

mercia GARDEN PRODUCTS LTD

03DTSHPN0806FGD1TW-V1

Please retain product label and instructions for future reference

Overall Dimensions:
Width = 2468mm
Depth = 2331mm
Height = 2170mm

Base Dimensions:
Width = 2350mm
Depth = 1753mm

Before assembly please make sure you have a suitable base ready to erect your building

MADE IN GREAT BRITAIN

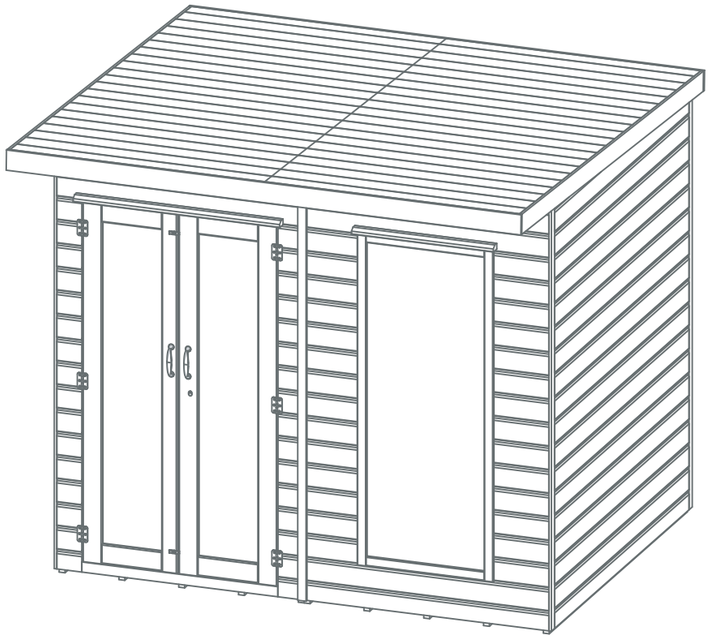

Contents

1

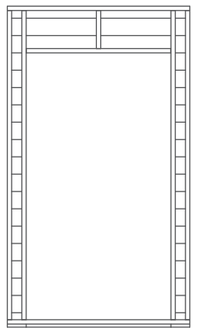

Door Panel
AI-03S11SHDD1180X2075-V1

2

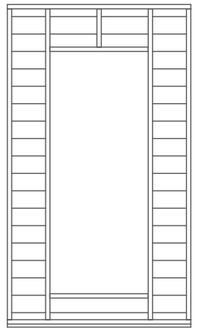

Single Window Panel
AI-03S11SH1TFWC1180X2075-V1

3

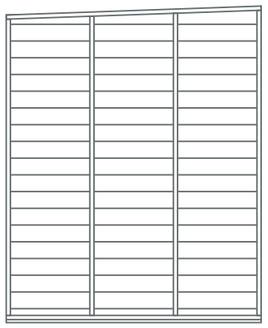

Right Panel
AI-03S11SHPGR1707X2119-V1

4

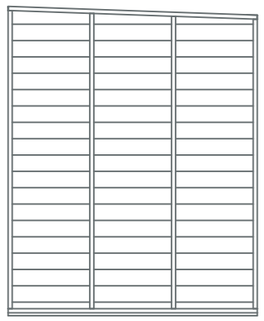

Left Panel
AI-03S11SHPGL1707X2119-V1

5

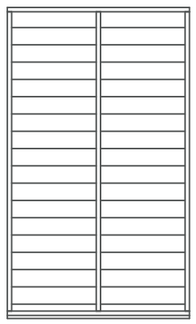

Back Panel QTY 2
AI-S11SHPP1180X2015-V1

6

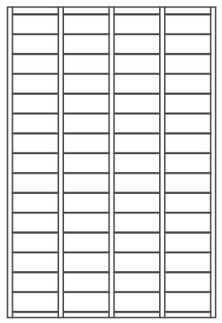

Floor QTY 2
AI-R11MBF1175X1753-V1

7

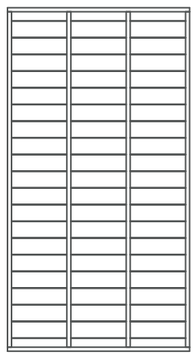

Roof QTY 2
AI-S11MBPR1222X2305-V1

8

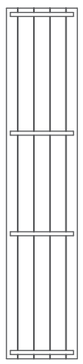

Under Roof Panel
AI-S11MBURF2440X484-V1

9

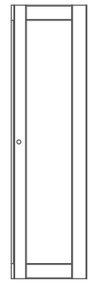

Master Door
AI-STDFGMD475X1715-V1

10

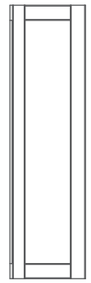

Secondary Door
AI-STDFGSD475X1715-V1

11

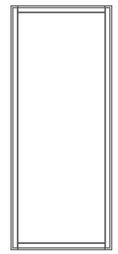

Fitted Window QTY 1
AI-FW653X1582-V1

12

Rain Guard - 28 x 44 x 680mm QTY 1
RG2844-680mm

13

Rain Guard - 28 x 44 x 990mm QTY 1
RG2844-990mm

14

Cover Trim - 12 x 40 x 2070mm QTY 3
S1240-2070mm

15

Cover Trim - 12 x 40 x 2035mm QTY 3
S1240-2035mm

16

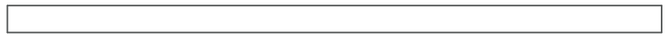

Fascia - 12 x 95 x 2306mm QTY 2
S1295-2306mm

17

Fascia - 12 x 95 x 2468mm QTY 2
S1295-2468mm

18

Door Frame Strip - 12 x 40 x 1740mm QTY 2
S1240-1740MM

19

Door Frame Strip - 12 x 40 x 996mm QTY 1
S1240-996MM

20

Eaves Frame - 28 x 28 x 1222mm QTY 2
FS2828-1222mm

21

Door Handle QTY 2
PI-07-0081

22

Press Lock
PI-07-0162

23

Butt Hinge QTY 6
PI-07-0066

24

Window Beading Block QTY 8
PI-07-0011

25

Felt

26

Turn Button QTY 2
PI-07-0034

27

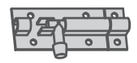

Barrel Bolt QTY 2
PI-07-0114

Nail Bag

There may be extra screws present in the nail bag

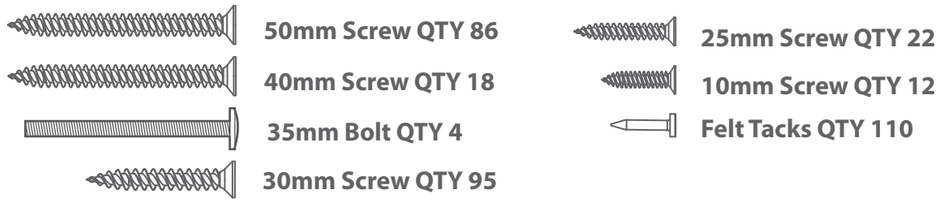

Pre Assembly

Before assembling remove the transportation blocks from the bottom of each panel.

Take care removing the blocks as to not damage the panels. Tap with a flat headed screwdriver and hammer.

Dispose of the blocks once removed.

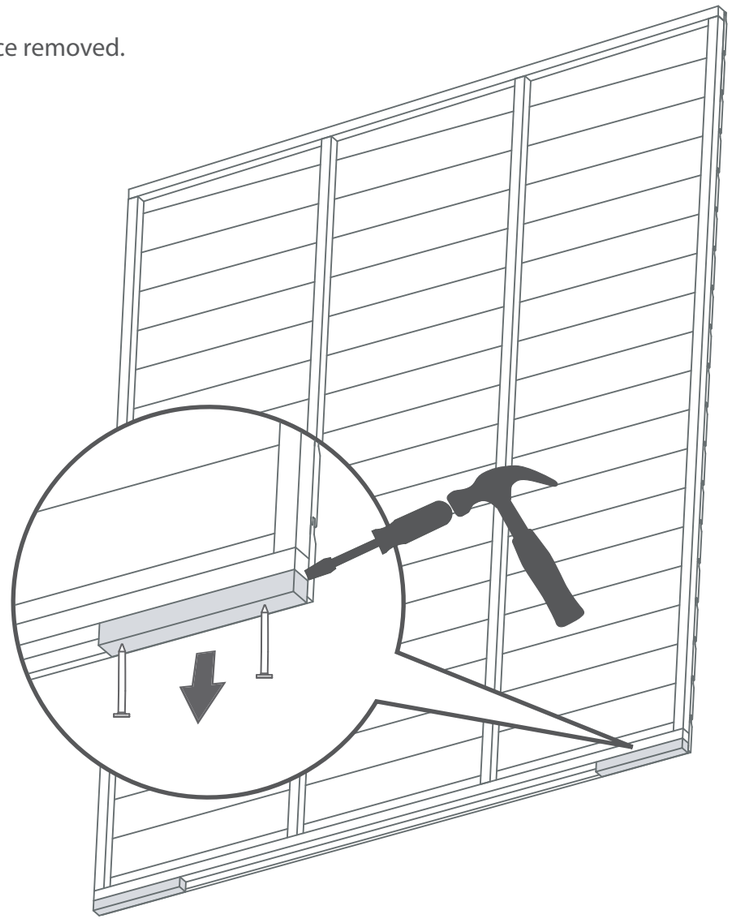

Step 1

Parts needed - No. 1 QTY 1
- No. 9 QTY 1
- No. 10 QTY 1
- No. 21 QTY 2
- No. 23 QTY 6

Fix the hinges to the master **(No. 9)** and secondary **(No. 10)** doors and to the door panel **(No. 1)** using 3x butt hinges **(No. 23)** per door. Ensure to predrill holes.

**** Fix to the door using 3x25mm screws & 3x30mm screws to the Door Panel per hinge, ensure the doors open freely.***

Fix the door handles **(No. 21)** to the outside of the master and secondary door using the 35mm bolts provided.

4x35mm Bolts
18x25mm Screws
18x30mm Screws

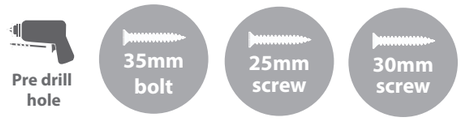

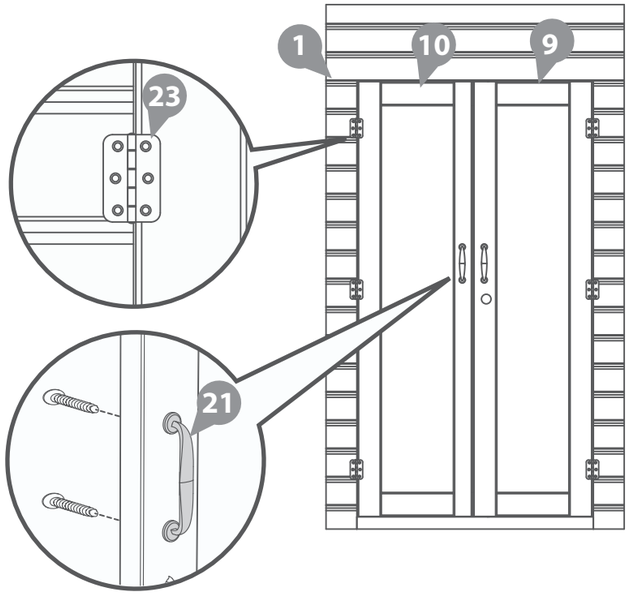

Step 2

Parts needed - No. 22 QTY 1
- No. 27 QTY 2

Secure the barrel bolts **(No. 27)** to the top & bottom of the secondary door using 6x10mm screws. Pre-drill the holes beforehand. Drill a hole in the framing above and below the door for the barrel bolt to fix into.

Attach the press lock **(No. 22)** to the master door with 4x25mm screws, aligning the barrel with the key hole.

****Ensure the key turns and locks properly before fixing to the door.***

12x10mm Screws
4x25mm Screws

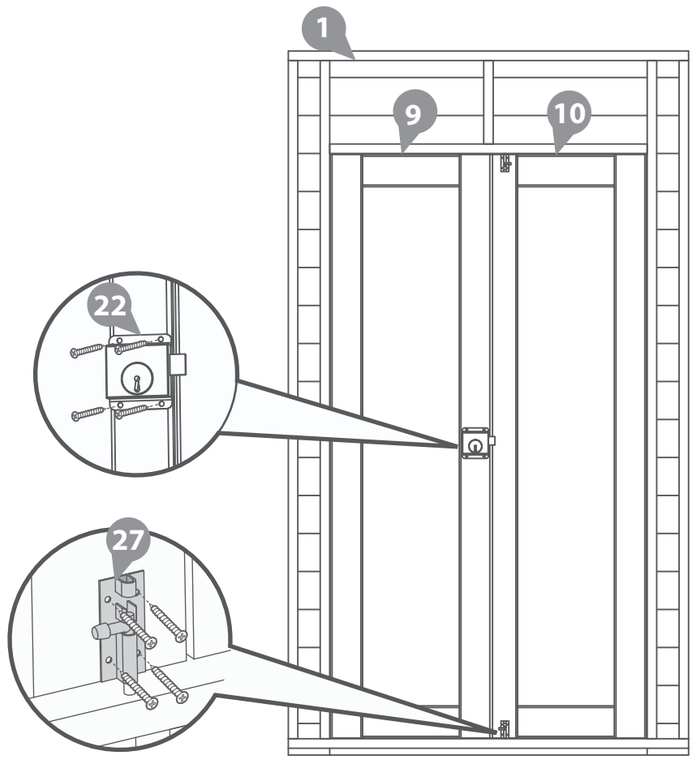

Step 3
Parts needed - No. 6 QTY 2

Place the assembled floor panels **(No. 6)** upside down onto a firm and level base. Ensure the base has suitable drainage, free from areas where standing water can collect.

Secure the floors together using 10x50mm screws through the floor bearers in an alternating pattern.

Once fixed together turn the floor back the right way up.

10x50mm Screws

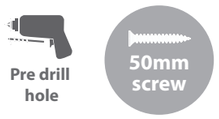

Step 4
Parts needed - No. 4 QTY 1
- No. 5 QTY 1

Join the Left Panel**(No. 4)** together with Back Panel **(No. 5)** as shown in the illustration.

***Please note that the back panels are shorter than the side panels**

- **a** Fix the corners with 50mm screws as shown in the illustration.
- **b** Do **not** secure the building to the floor until the roof is fitted.

4x50mm Screws

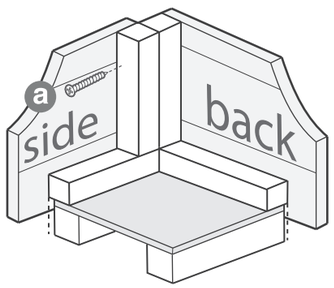

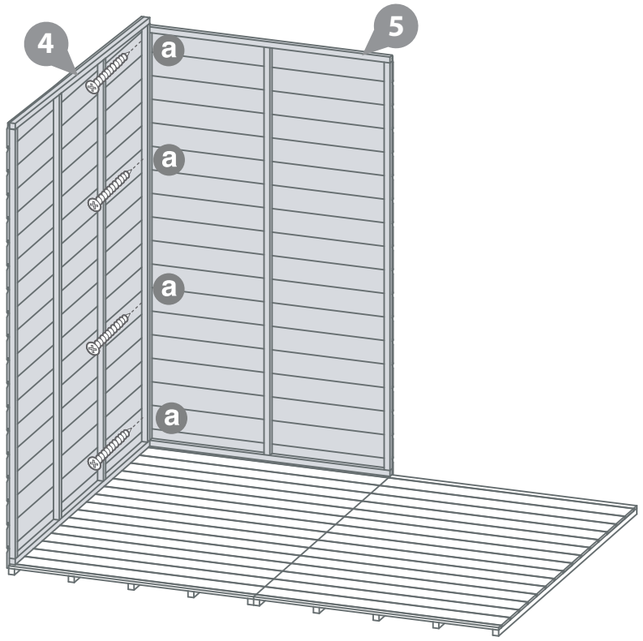

Step 5
Parts needed - No. 3 QTY 1
- No. 5 QTY 1

Connect the Back Panel **(No. 5)** to the already standing Back Panel. Followed by adding the Right Panel **(No. 3)**.

Please note that the back panel is is shorter than the side panels.

- **a** Fix the corners with 50mm screws as shown in the illustration.
- **b** Do **not** secure the building to the floor until the roof is fitted.

8x50mm Screws

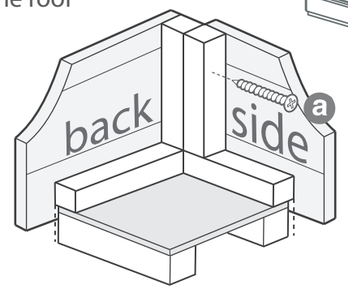

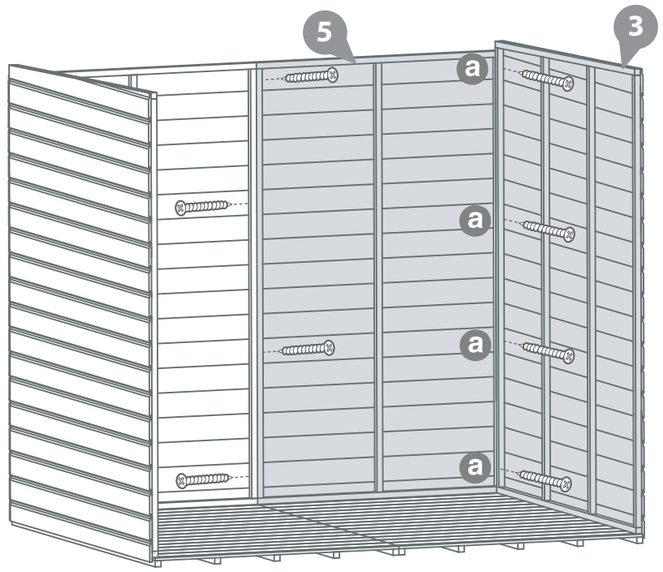

Step 6
Parts needed - No. 2 QTY 1

Connect the Single Window Panel **(No. 2)** with the Right Panel **(No. 3).**

Please note that the single window panel is shorter than the side panels.

- **a** Fix the corners with 50mm screws as shown in the illustration.
- **b** Do **not** secure the building to the floor until the roof is fitted.

4x50mm Screws

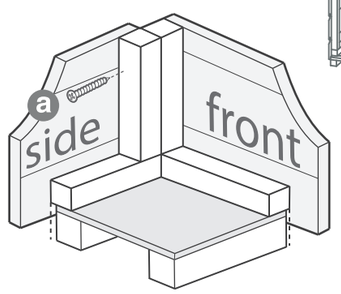

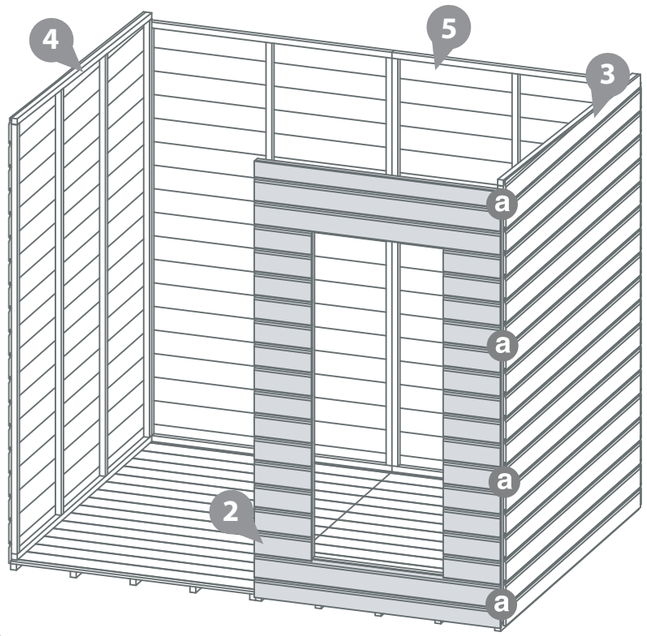

Step 7

Parts needed - No. 1 QTY 1

Fix the Door Panel **(No. 1)** between the Single Window Panel **(No. 2)** and the Left Panel **(No. 4)** using 50mm screws in alternating directions.

Please note that the Door panel is shorter than the side panels.

- **a** Fix the panels together with 50mm screws as shown in the illustration.
- **b** Do **not** secure the building to the floor until the roof is fitted.

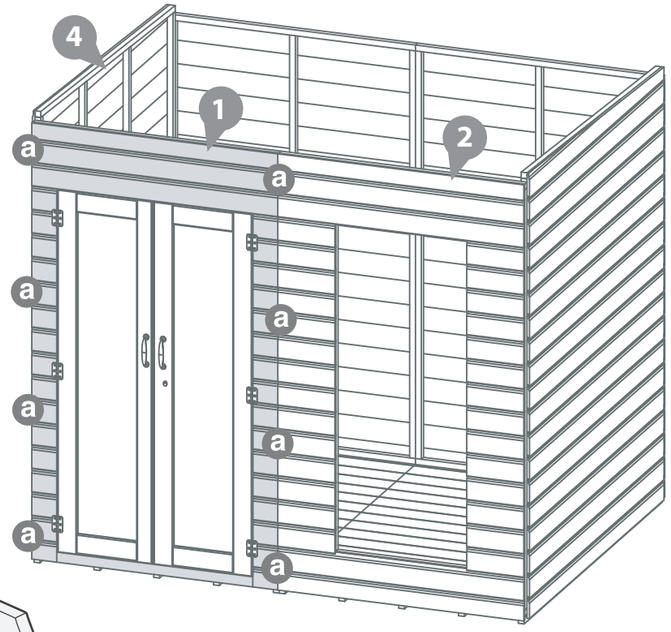

8x50mm Screws

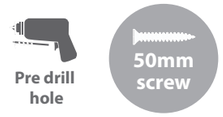

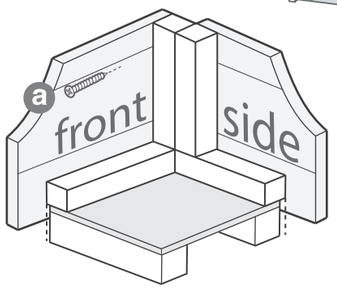

Step 8

Parts needed - No. 7 QTY 2
- No. 20 QTY 2

Fix the Eaves framing **(No.20)** to the roof **(No.7)** using 4x50mm screws per eaves framing, screwing through the eaves framing and into the roof framing.

Ensure the eaves framing is flush to the edges of the roof framing before securing.

8x50mm Screws

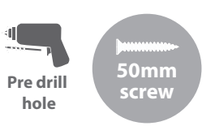

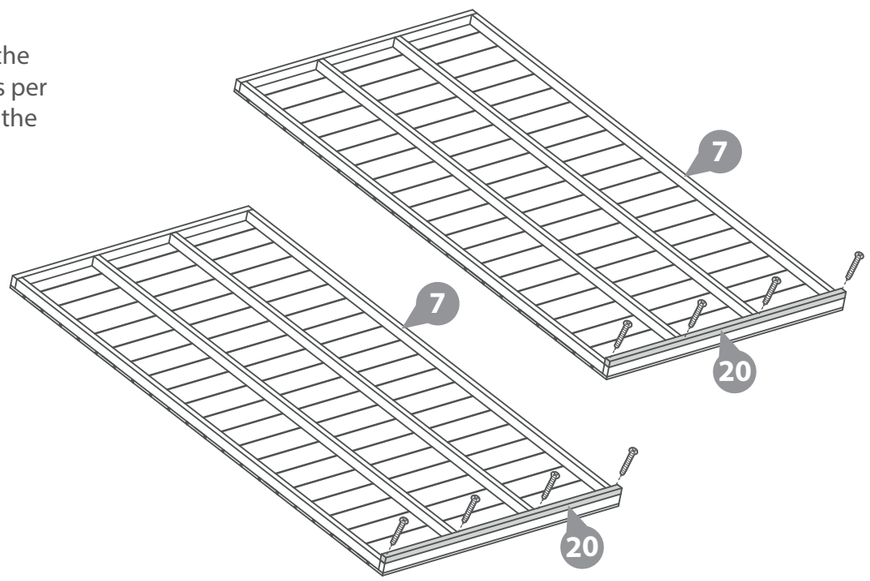

Step 9

Parts needed - No. 7 QTY 2

Place the Roof Panels (**No. 7**) onto the top of the building. Align the two Roof Panels so they sit square before fixing into postion. The roof eaves frames (**No. 20**) should sit at the back of the building.

The roof panels should sit on top of the left and right panels, the roof panels framing should sit on top of the back, door and single window panels.

Do not secure the building to the Floor until the roof is fitted.

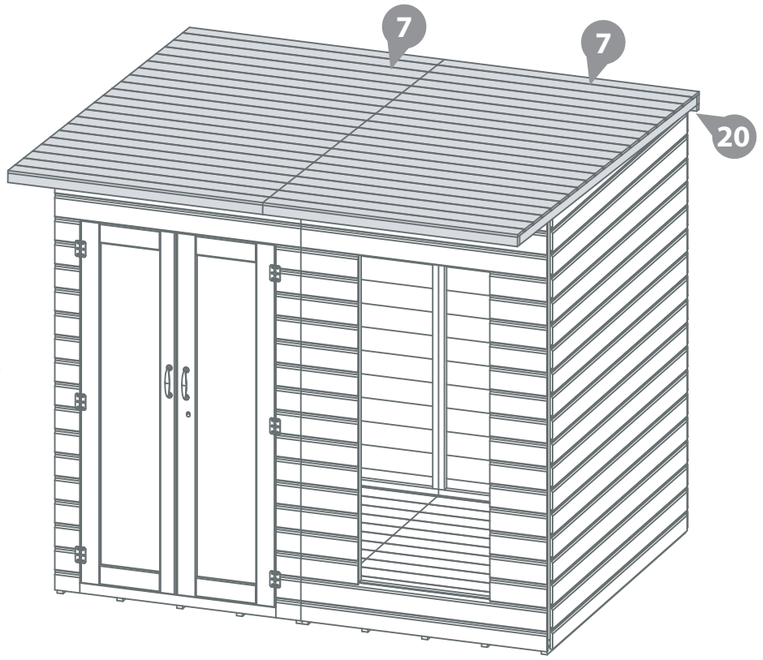

Step 10

Fix the two Roof panels **(No. 7)** together using 50mm screws. Offset the screws from each other as shown in the diagram.

***Roof boards not shown for illustration purposes.**

Do not secure the building to the Floor until the roof is fitted.

8x50mm Screws

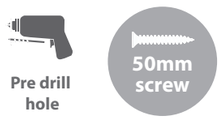

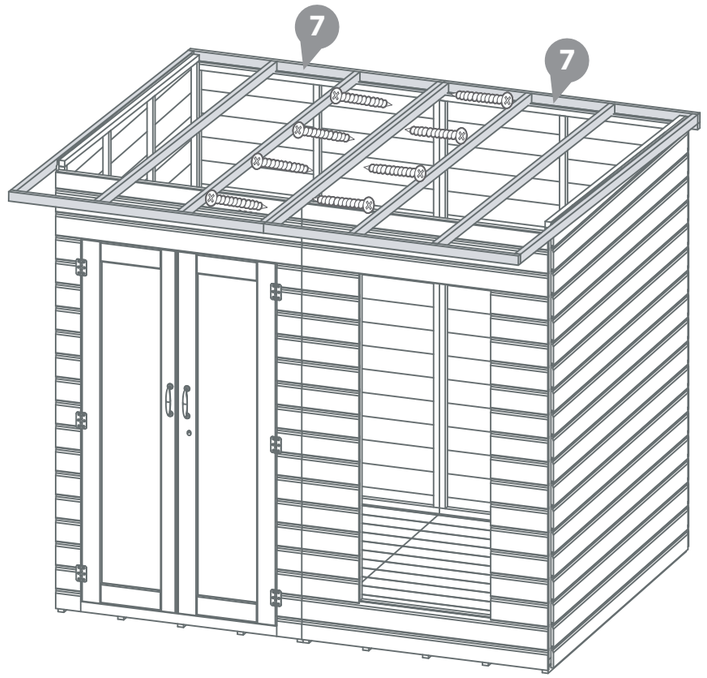

Step 11

Screw internally with 6x50mm screws securing the roof panels **(No. 7)** at the front and back of the building.

***Roof boards not shown for illustration purposes.**

Do not secure the building to the Floor until the roof is fitted.

12x50mm Screws

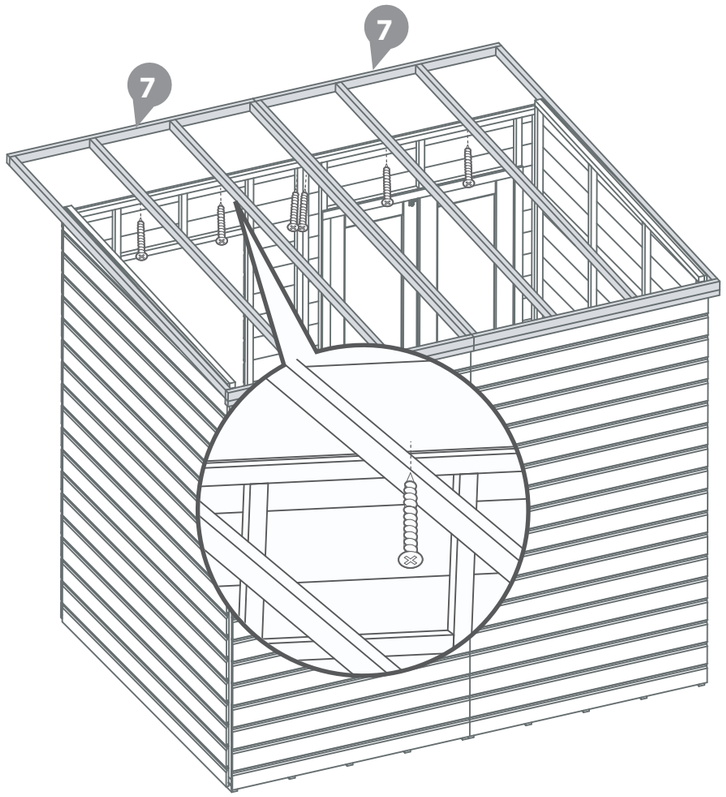

Step 12

Once the Roof **(No. 6)** is aligned and secure the Floor can be fixed into postion.

Fix the building into place by screwing through the panel into the floor making sure to screw into the floor bearers.

18x50mm Screws

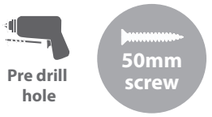

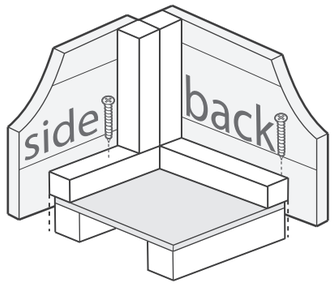

Step 13

Parts needed - No. 8 QTY 1

Place the Under Roof Panel (**No. 8**) into position, making sure it is flush to the front of the building. Using a pencil mark on the under roof panel where the roof panel framing is to use as a guide for fixing into place.

Fix in place making sure to screw through in to the Roof framing. Pre-drill holes first.

21x30mm Screws

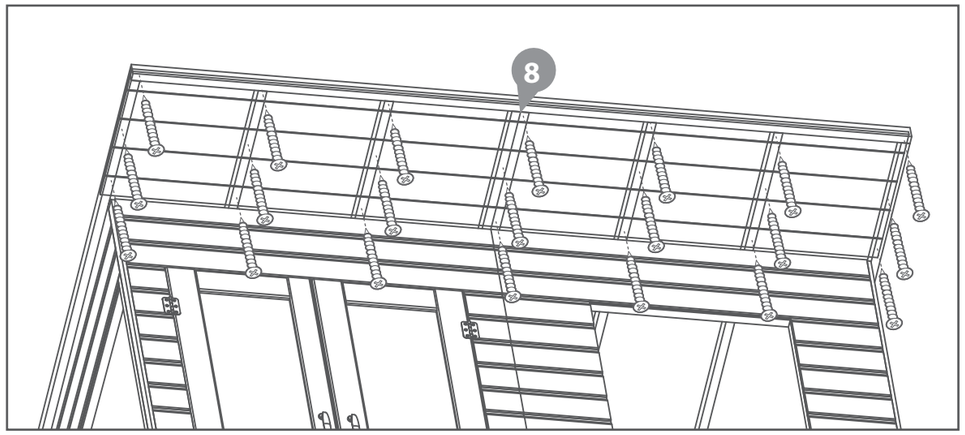

Step 14

Parts needed - No. 25 QTY 1

Cut the Felt (**No. 25**) into 3 sheets at 2550mm each and lay onto the roof. Starting at the back and working towards the front.

***Ensure there is approximately 50mm of overhang around the building.**

Fix into place using 110x felt tacks at 100mm intervals.

110x Felt tacks **Felt Length 2550mm**

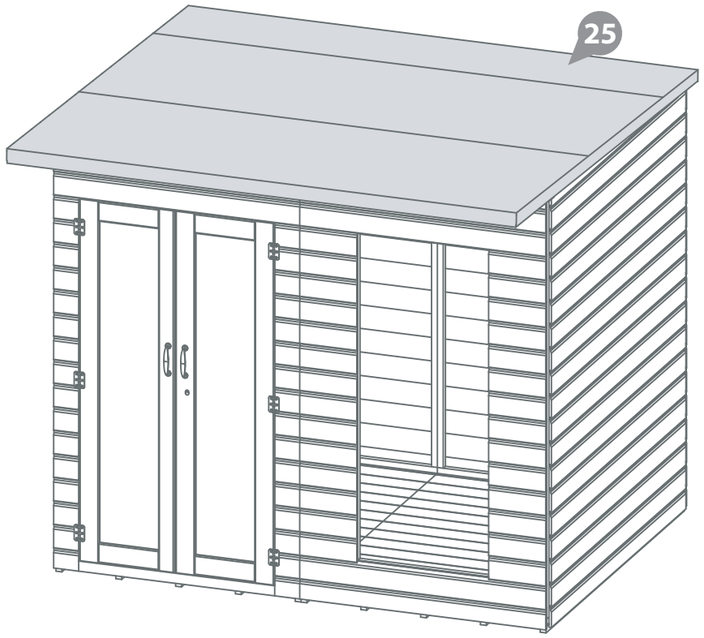

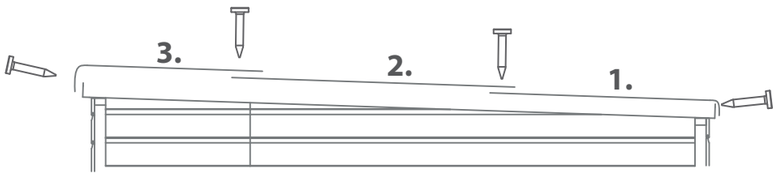

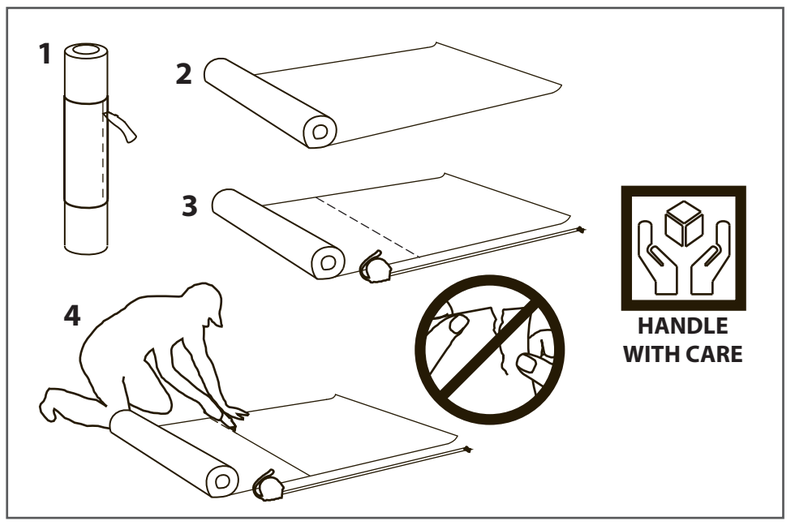

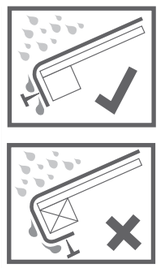

Step 15

Parts needed - No. 16 QTY 2
- No. 17 QTY 2

Fix the fascias **(No. 16 & 17)** to the front, back and sides of the building using 18x40mm screws.

Ensure the fascia fixed to the back of the roof finishes flush with the top to enable water to run off.

18x40mm Screws

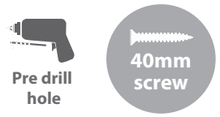

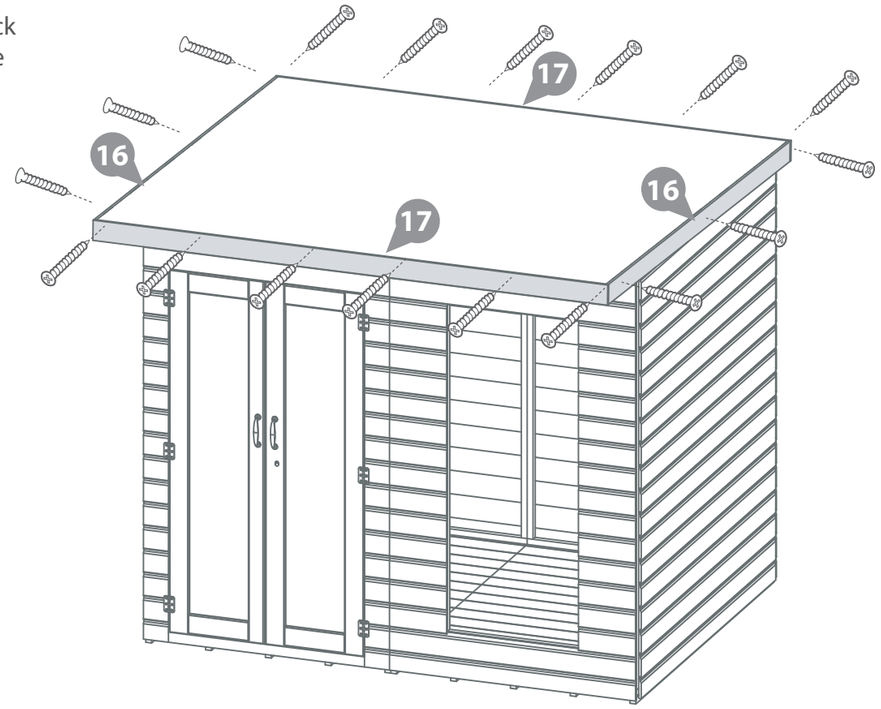

Step 16

Parts needed - No. 11 QTY 1
- No. 24 QTY 8

Position the Window **(No. 11)** central into the window opening.

c Fix eight Window Beading Blocks **(No. 24)** to the Window **(No. 11)** , four down each side and fix with 1x30mm screw.

d Place the Window into the window panel and fix by screwing though the Window Block (**No. 24**) with 2x30mm screws as shown.

Fix the window beading blocks (No. 24) to the window before fitting the window into the panel.

24x30mm screws.

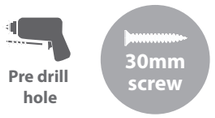

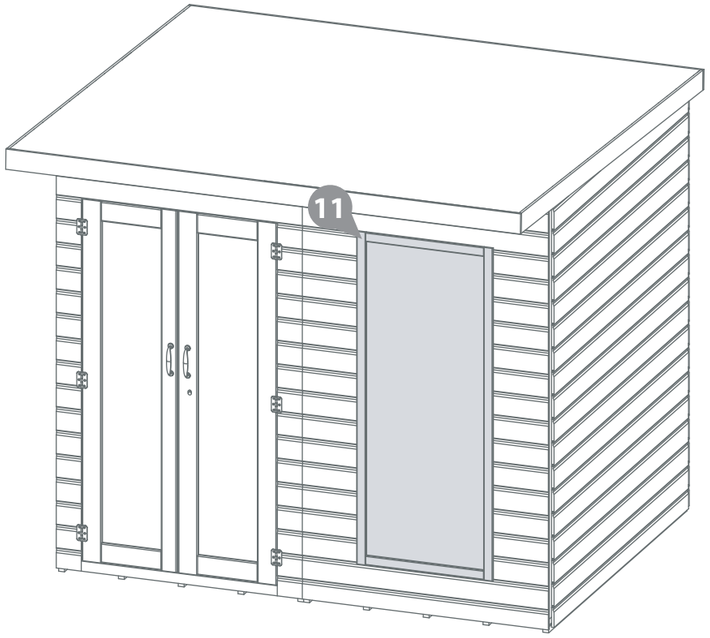

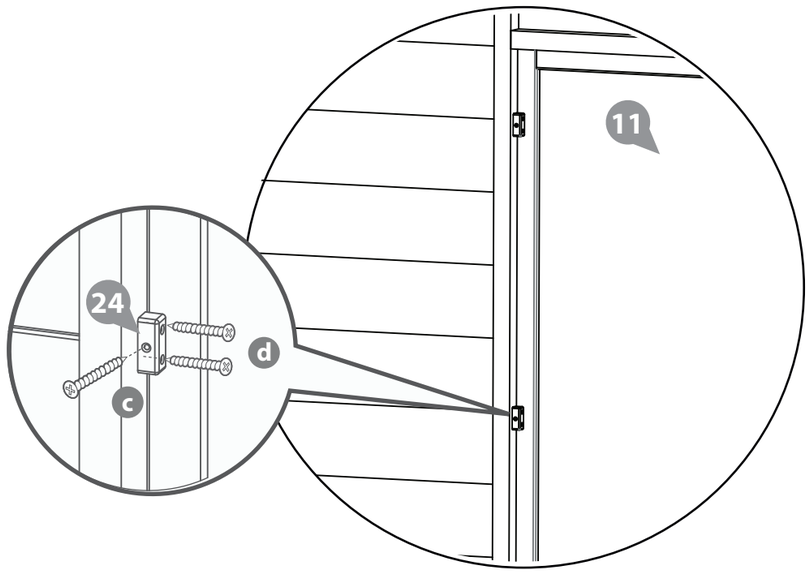

Step 17

Parts needed - No. 12 QTY 1
- No. 13 QTY 1

Fix the rain guards **(No. 12)** above the window and a rain guard above the double doors (**No. 13.)** Secure in place using 3x50mm screws per rain guard, ensuring to screw through the framing at an angle.

6x50mm Screws

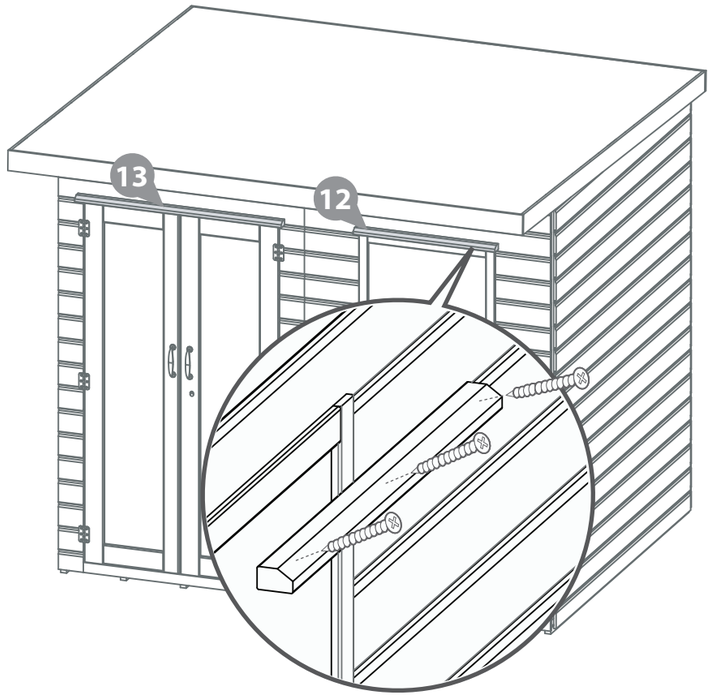

Step 18

Parts needed - No. 14 QTY 3
- No. 15 QTY 3

Attach the cover trims **(No. 14 at the front)** and **(No. 15 at the rear)** to each corner of the building and over panel joins. Use 3x30mm screws per cover trim.

18x30mm Screws

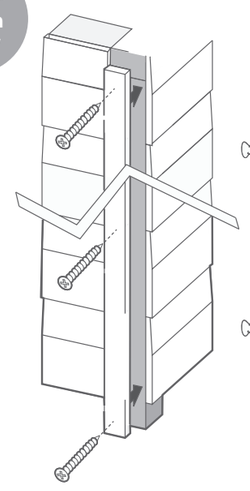

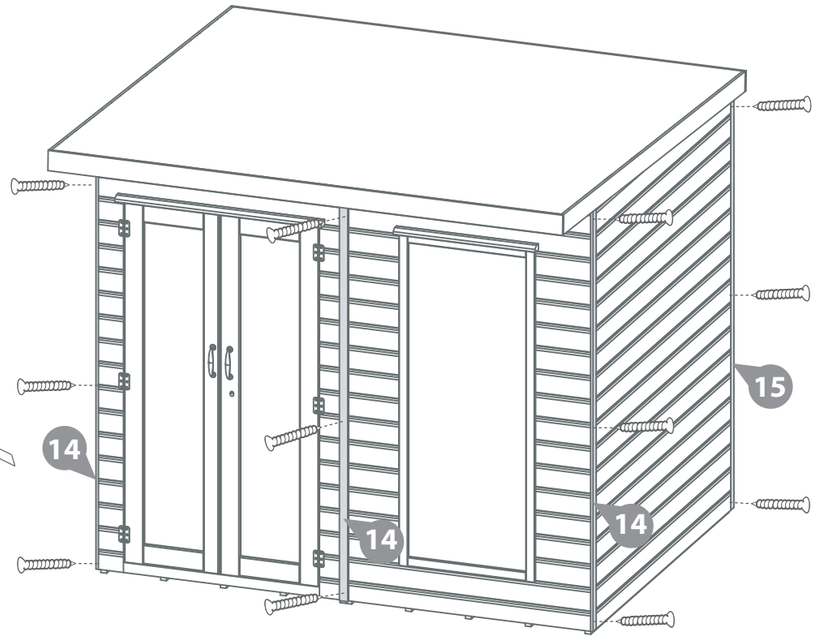

Step 19

Parts needed - No. 26 QTY 2

Attach the two turn buttons **(No. 26)** to the secondary door at the top and bottom using 2x30mm screws.

2x30mm Screws

These turn buttons help to keep your doors straight during high & low levels of moisture content in the air.

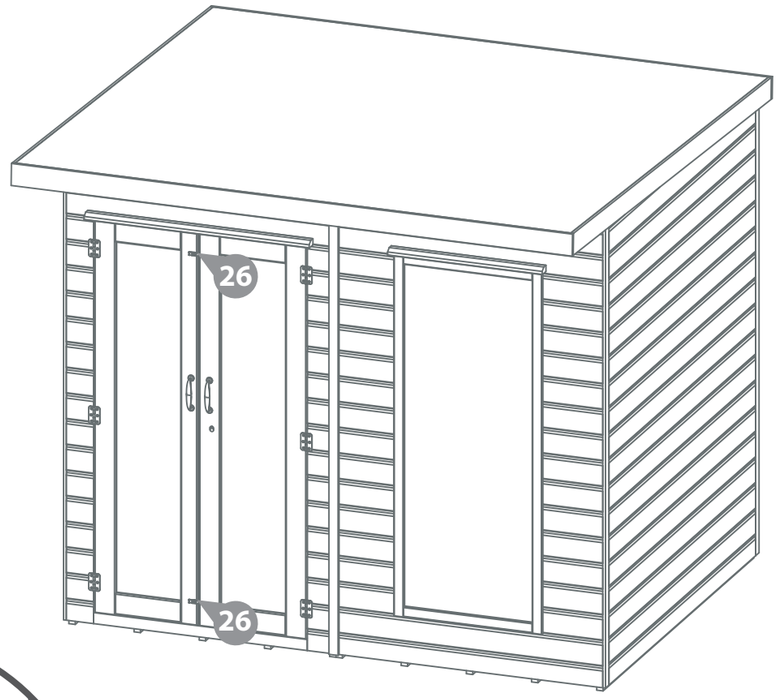

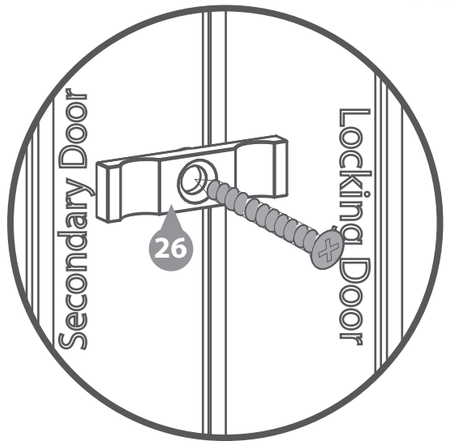

Step 20

Parts needed - No. 18 QTY 2
- No. 19 QTY 1

On the inside of the building fix the Door Frame Strips **(No. 18 & 19)**, to the top and sides of the doors frames. Make sure that the edges are flush with the edge of the framing. Fix with 4x30mm screws per strip.

12x30mm Screws

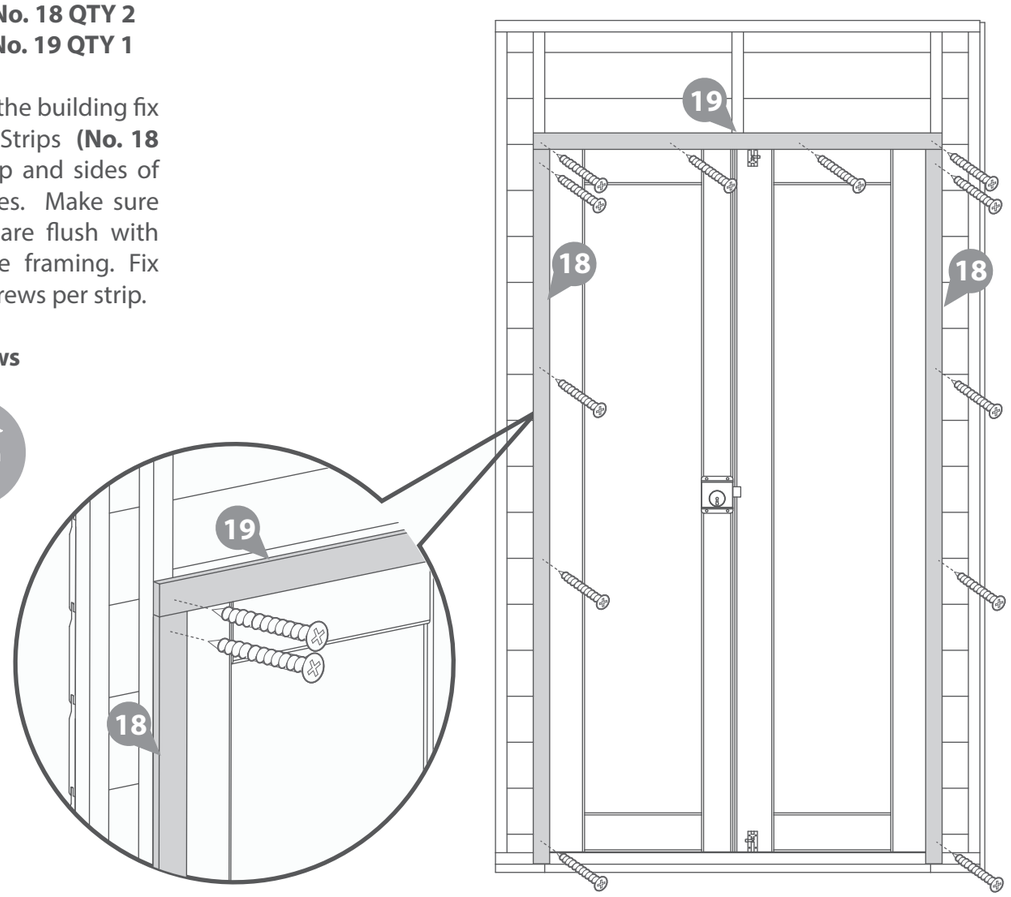

Step 21

It is recommended that after the construction, treatment and the removal of the protective window cover that sealant is used to keep the building weather tight.

1. Treat the building

2. Remove film from the windows

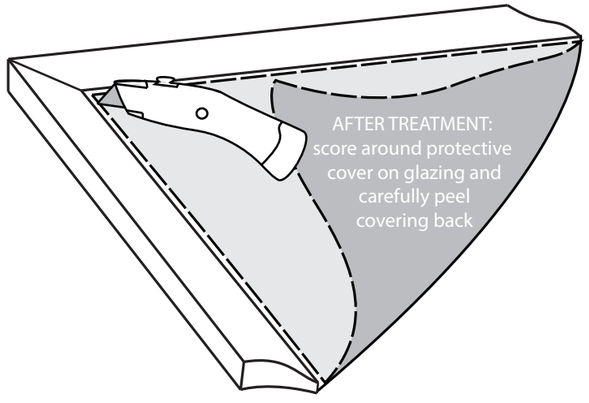

3. Add sealant around the windows.

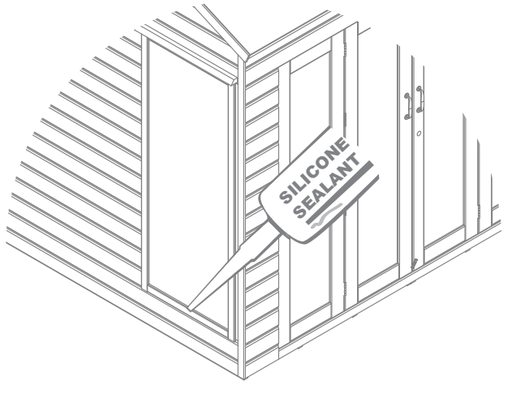

MANUFACTURER'S RECOMMENDATIONS

All our garden buildings have been designed and manufactured with care and attention to be the perfect addition to your outdoor space. To ensure you do get the best out of your new garden building and to increase the longevity we advise that you follow the product instructions and our manufacturer's recommendations as detailed below. Thank you for choosing a Mercia Garden product!

1 Choosing the most suitable location for your garden building...

A minimum of 60cm should be left around the perimeter of your garden building to allow access for maintenance, annual treatment and to allow air flow around the building.

Where possible you should avoid placing your garden building underneath large trees to prevent the tree causing damage to the building.

2 Preparing the base for your garden building...

All our buildings must be built on a firm, level base to ensure the longevity of the building and prevent the wood from distorting. We recommend either concrete, concrete slabs or a wooden base, such as our 'Portabase'.

The base should be slightly smaller than the external measurement of the building, i.e. the cladding should overlap the base, creating a run off for water and preventing water from pooling underneath the building.

We also recommend that the floor of the garden building is a minimum of 25mm above the surrounding ground level to avoid flooding.

3 After installation...

Once your garden building has been installed it will need to be treated as soon as possible and annually to prevent the timber from deteriorating and to waterproof it. This is required to maintain the anti-rot guarantee.

Dip Treated buildings - Require a preservative treatment to protect against rot and decay and a waterproof treatment to prevent water ingress
Pressure Treated buildings - Require a waterproof treatment to prevent water ingress
Log Cabins/Insulated Garden Rooms - Are supplied untreated and require a preservative and waterproofing treatment

We also recommend using a silicon sealant on the inside and outside of the windows as soon as possible after assembly and treatment to fully seal the windows.

Roofing felt/covering should be checked annually and replaced or fixed accordingly.

4 General maintenance and wood characteristics

As wood is a natural material it may be affected by the following:

Shrinkage and warping - The timber used in the construction of your garden building will have retained some of its natural moisture content. The moisture content of the timber will vary, depending upon prevailing environmental conditions, which will result in the components either naturally expanding or contracting. As the components dry out shrinkage may occur. A good waterproofing treatment from the start is the best protection to minimise the effect of moisture loss/intake.

In extended periods of very warm weather getting some moisture to the building will help the overall balance. You can do this by spraying it down lightly with a garden hose. In contrast after snow fall try to remove the snow as best as possible from the roof to prevent moisture intake and to remove the extra weight.

Top tip - using a garden brush will help you to reach the highest part of the building to remove snow and any debris left from bad weather.

Damp and mould - During the winter months, cold and damp conditions can result in an increased amount of moisture within your garden building, especially when used infrequently. Condensation can form on the timber and other items stored within your garden building. If left this moisture is likely to cause mould and mildew. To prevent the build-up of moisture, we recommend leaving the door or windows of your building open from time to time, to allow the fresh air to circulate. We also advise against storing wet or damp items in your garden building as this will also increase the level of moisture in the building. If mould or mildew does start to form within your building we recommend using an anti-mould cleaner to remove it and to prevent it spreading, which if left untreated could permanently damage your garden building.

Splits, cracks and knots - You may notice small splits and cracks in some components or holes may appear where knots shrink and fall out. This will not affect the structure of your Garden building however if you wish to fill them this can be easily done using any good quality wood filler.

Sap - is naturally occurring in wood and may appear in some boards of your garden building. If you wish to remove the sap, we advise waiting until it is dry and then using a sharp knife to carefully remove it. If the removal of the sap causes a hole in the timber, we recommend using a good quality wood filler to fill it.

For more handy hints and tips on how to care and maintain your garden building please refer to the MGP Customer Portal at www.mgplogistics.co.uk

Any further questions?

Contact our Customer Service Team on: 01636 821215

WARRANTY AND GUARANTEE

1 Manufacturer's Warranty

All Mercia Garden Products are supplied with a 1 year warranty on all parts against manufacturing defects.
This warranty does not cover movement, warping or splitting of timber products over time.

This warranty will be voided if any of the following occur:

1. The building has been customised or modified/adapted in any way.
2. The person claiming is not the original purchaser of the building.
3. Any damage has been caused by or as a result of misuse.
4. The building has not been maintained and cared for in accordance to our advisories and manufacturer's recommendations.
5. The building has not been treated annually or as per the manufacturer's recommendations, please ensure receipts are kept to validate this claim.
6. The building has not been erected, fitted or installed as per the supplier instructions.
7. The building has not been erected on a suitable sized firm flat, solid level concrete/slab base or placed on pressure treated bearers.
8. The building is or has been placed with 2 feet (60cm) of any obstructions (walls, trees, plants, fences etc.) which can allow moisture to penetrate the timber.
9. The roofing felt has been incorrectly fitted or damaged allowing water ingress, or not properly maintained.
10. Any windows and joints have not been sealed, inside and out, with silicone or other watertight sealant.
11. Any timber has been cut, pierced or drilled without subsequent application of approved cut-end treatment.

ANTI ROT GUARANTEE 10 YEARS ANTI ROT GUARANTEE

REGISTER FOR YOUR
ANTI-ROT
GUARANTEE TODAY

PLEASE SCAN HERE:

2 Anti-rot Guarantee

Mercia Garden Products offer a 10 year anti-rot guarantee on all dip treated (a preparatory treatment) and 15 years on all pressure treated products. This guarantee covers solid timber against rot, decay, blue stain and insect attack.
To validate the guarantee the building must be treated with a recognised wood preserver/water proof top coat (as detailed within manufacturer's recommendations) as soon as possible after assembly and annually thereafter.
This guarantee does not cover movement, warping or splitting of timber products over time.

This guarantee will be voided if any of the following occur:

1. The building has been customised or modified/adapted in any way.
2. The person claiming is not the original purchaser of the building.
3. Any damage is caused by or as a result of misuse.
4. The building has not been maintained and cared for in accordance to our advisories and manufacturer's recommendations.
5. The building has not been treated annually or as per the manufacturer's recommendations, please ensure receipts are kept to validate this claim.
6. The building has not been erected, fitted or installed as per the supplier instructions.
7. The building has not been erected on a suitable sized firm flat, solid level concrete/slab base or placed on pressure treated bearers.
8. The building is or has been placed with 2 feet (60cm) of any obstructions (walls, trees, plants, fences etc.) which can allow moisture to penetrate the timber.
9. The roofing felt has been incorrectly fitted or damaged allowing water ingress, or not properly maintained.
10. Any windows and joints have not been sealed, inside and out, with silicone or other watertight sealant.
11. Any timber has been cut, pierced or drilled without subsequent application of approved cut-end treatment.

Mercia Garden Products Limited, Sutton On Trent, Newark, Nottinghamshire, NG23 6QN
www.merciagardenproducts.co.uk