General Instructions

Please retain product label and instructions for future reference

03HEL1008DDFW-V3

10x8 Helios Summerhouse

BEFORE YOU START PLEASE READ INSTRUCTIONS CAREFULLY
- Check the pack and make sure you have all the parts listed.
- When you are ready to start, make sure you have the right tools at hand (not supplied) including a Phillips screwdriver, Stanley knife, Wood saw, Step ladder, Hammer and a Drill with 2mm bit.
- Ensure there is plenty of space and a clean dry area for assembly.

LOCATION FOR YOUR GARDEN BUILDING
A minimum of 60cm should be left around the perimeter of your garden building to allow access for maintenance, annual treatment and to allow air flow around the building.

Where possible you should avoid placing your garden building underneath large trees to prevent the tree causing damage to the building.

TIMBER
As with all natural materials, timber can be affected during various weather conditions. For the duration of heavy or extended periods of rain, swelling of the wood panels may occur. Warping of the wood may also occur during excessive dry spells due to an interior moisture loss. Unfortunately, these processes cannot be avoided but can be helped. It is suggested that the outdoor building is sprayed with water during extended periods of warm sunshine and sheltered as much as possible during rain or snow.

Once your garden building has been installed it will need to be treated as soon as possible and annually to prevent the timber from deteriorating and to waterproof it. This is required to maintain the anti-rot guarantee.

Dip Treated buildings - Require a preservative treatment to protect against rot and decay and a waterproof treatment to prevent water ingress
Pressure Treated buildings - Require a waterproof treatment to prevent water ingress
Log Cabins - Are supplied untreated and require a preservative and waterproofing treatment.

BUILDING A BASE
When thinking about where the building and base is going to be constructed:
Ensure that there will be access to all sides for maintenance work and annual treatment.

Ensure the base is level and is built on firm ground, to prevent distortion. Refer to diagrams for the base dimensions, The base should be slightly smaller than the external measurement of the building, i.e. The cladding should overlap the base, creating a run off for water. It is also recommended that the floor be at least 25mm above the surrounding ground level to avoid flooding.

TYPES OF BASE
- Concrete 75mm laid on top of 75mm hard-core.
- Slabs laid on 50mm of sharp sand.

Whilst all products manufactured are made to the highest standards of Safety and in the case of childrens products independently tested to EN71 level, we cannot accept responsibility for your safety whilst erecting or using this product.

All building's should be erected by two adults

Winter = High Moisture = Expansion
Summer = Low Moisture = Contraction

2mm Drill bit

For ease of assembly, you **MUST** pilot drill all screw holes and ensure all screw heads are countersunk.

CAUTION
Every effort has been made during the manufacturing process to eliminate the prospect of splinters on rough surfaces of the timber. You are strongly advised to wear gloves when working with or handling rough sawn timber.

****Protim Aquatan T5 (621)****

Your building has been dip treated with **Aquatan**.

Aquatan is a water-based concentrate which is diluted with water, the building as been treated by the correct application of Aquatan solution and then allowed to dry.

Aquatan is a decorative finish to colour the wood, which is applied industrially to timber fence panels and garden buildings.

Aquatan *undiluted* contains: boric acid, sodium hydroxide 32% solution, aqueos mixture of sodium dioctyl sulphosuccinat and alcohols: 2, 4, 6-trichlorophenol.

ANTI ROT GUARANTEE 10 YEARS ANTI ROT GUARANTEE

REGISTER FOR YOUR
ANTI-ROT
GUARANTEE TODAY

PLEASE SCAN HERE:

For assistance please contact customer care on: 01636 821215

Mercia Garden Products Limited,
Sutton On Trent,
Newark,
Nottinghamshire,
NG23 6QN

www.merciagardenproducts.co.uk

03HEL1008DDFW-V3

Please retain product label and instructions for future reference

Overall Dimensions:
Width = 3032mm
Depth = 2933mm
Height = 2141mm

Base Dimensions:
Width = 2918mm
Depth = 2387mm

Before assembly please make sure you have a suitable base ready to erect your building

MADE IN GREAT BRITAIN

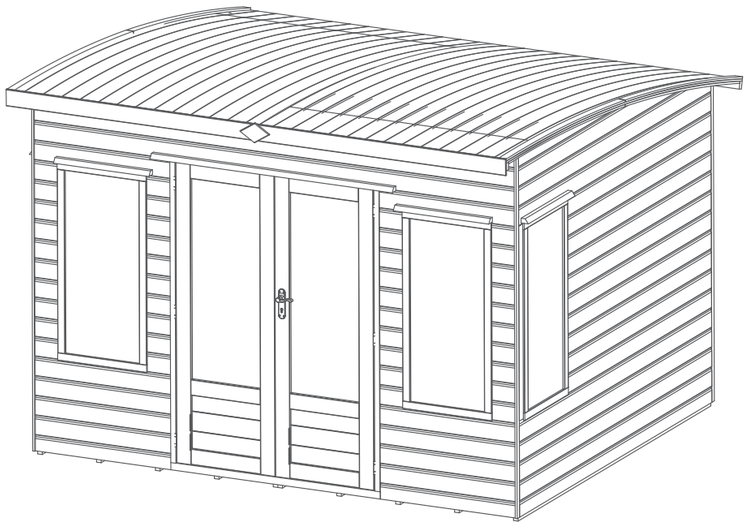

Building Content:

1

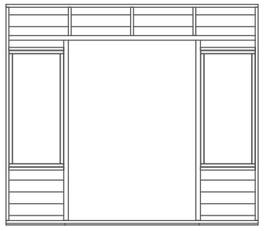

Door Panel QTY 1
AI-03HELDP2918X2093-V2

2

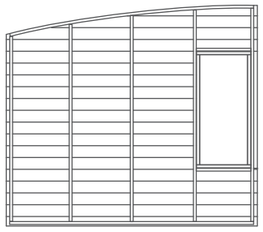

Right Gable QTY 1
AI-03HELWGR2382X2093-V2

3

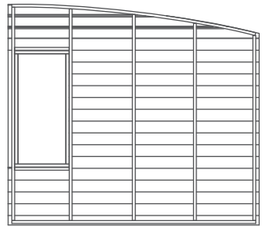

Left Gable QTY 1
AI-03HELWGL2382X2093-V2

4

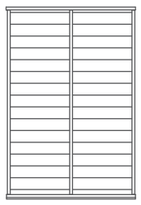

Back Panel QTY 2
AI-03HELBP1459X1821-V3

5

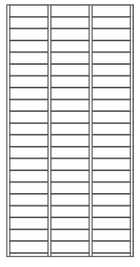

Floor QTY 2
AI-03TAGFLOOR2387X1459-V1

6

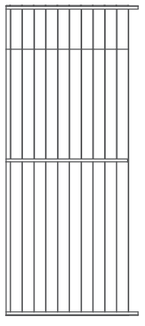

Roof QTY 2
AI-03TAGROOF1516X2950-V1

7

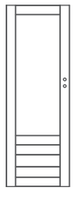

Master Door QTY 1
AI-03SHHGMD600X1720-V1

8

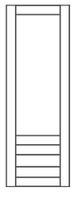

Secondary Door QTY 1
AI-SHHGSD600X1720-V1

9

Roof Bar QTY 3
AI-03HELRB2831X101-V1

10

Roof Block - 28x28x140mm QTY 6
FS2828-G-160mm (angled)

11

Large Rain Guard - 28x44x1272mm QTY 1
RG2844-1272mm

12

Small Rain Guard - 28x44x580mm QTY 4
RG2844-580mm

13

Roof End - 100x12x2950mm QTY 2
MB12RT100-2950mm

14

Door Beading - 17x12x1711mm QTY 2
S1217-1711mm

15

Top Roof Trim - 45x12x1485mm QTY 4
S1245-1485mm

16

Bottom Roof Trim - 45x12x1454mm QTY 4
S1245-1454mm

17

Fascia - 95x12x1516mm QTY 2
SR1295-1516mm

18

Front Cover Trim - 30x12x2088mm QTY 2
S1230-2088mm

19

Rear Cover Trim - 30x12x1827mm QTY 3
S1230-1827mm

20

Door Bar - 60x16x1705mm QTY 1
S1660-1705mm

21

Finial QTY 1
Shed Diamond Finial

22

Door Handle
PI-07-0001

23

Mortice Lock
PI-07-0017

24

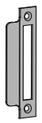

Key Plate

25

Hinge QTY 6
PI-07-0023

26

Turn Button QTY 2
PI-07-0034

27

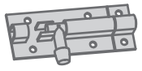

Tower Bolt QTY 2
PI-07-0114

28

Felt

Nail Bag

80mm Screw x 12

30mm Screw x 123

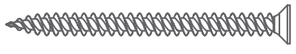

50mm Screw x 83

Felt Tacks x 190

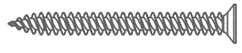

40mm Screw x 78

Pre Assembly

Remove the transportation blocks from the bottom of each panel before beginning assembly.

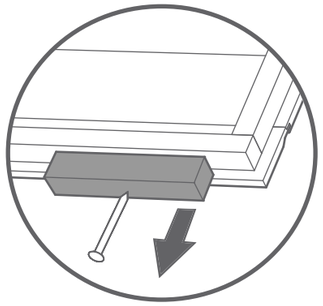

Step 1

Position the floor (***No.5***)sections together as shown in the illustration, ensure that the floors are flush together and secure into position using 16x50mm screws.

Screw through the top of the floor diagonally into the bearer.

16x50mm Screws

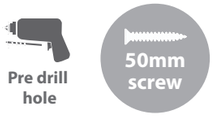

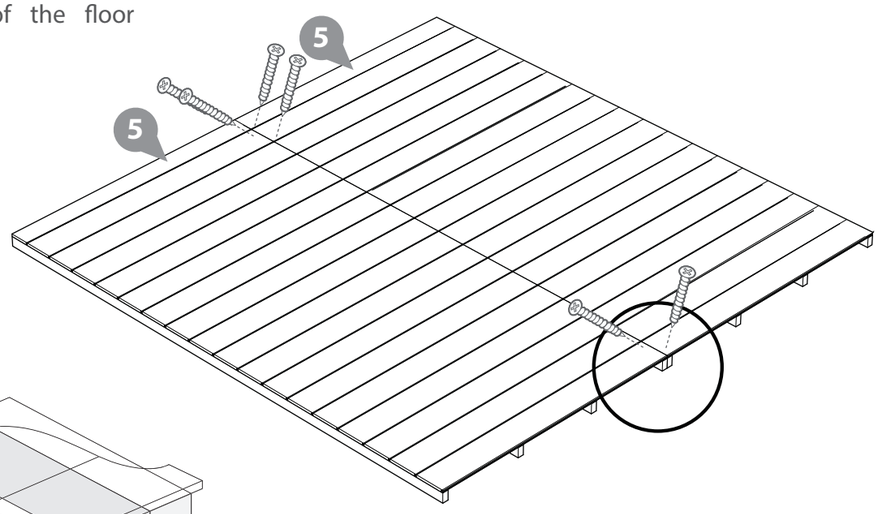

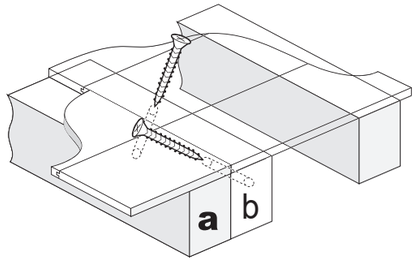

Please note: the floors do NOT connect by T&G

Step 2

a Join the flush hinges **(No. 25)** to the door frames **(No. 7 & 8)** using 30mm screws. Ensure hinges are attached using the outer plate of the hinge.

Fit the doors to the door panel with 30mm screws making sure to use the inner plate of the hinge.

b Fit the mortice lock **(No.25)** into the recess and fix in place with the screws provided. Fit the key plate **(No. 25)** to the opposite door using the screws provided.

c Fix the door handles **(No.25)** and the metal bar (spindle) using 8x30mm screws. Ensure the mortice lock closes correctly. If not, remove lock and turn the catch around using the small grub screw.

44x30mm screws

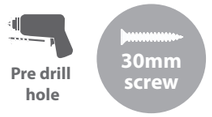

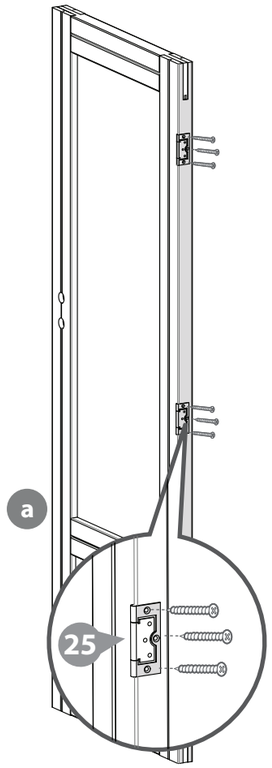

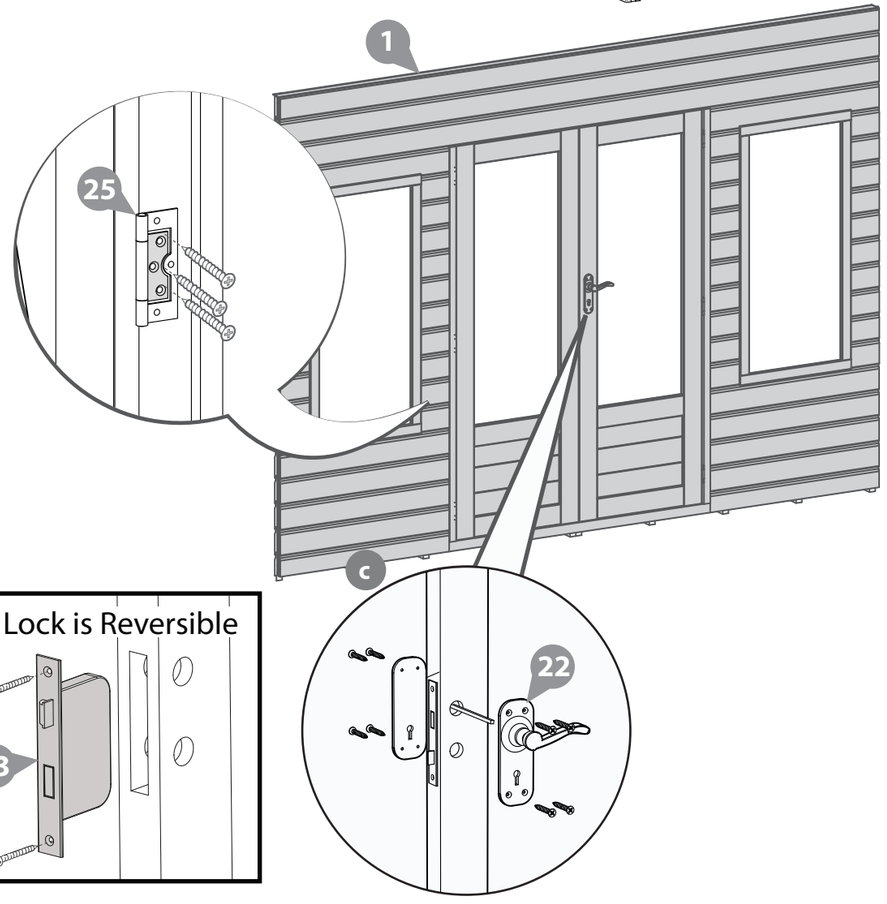

Step 2 Continued...

d Fix the door bar **(No. 20)** to the inside of the secondary door using 6x30mm screws as shown in the illustration.

Fit the door beading **(No. 14)** to the inside of the door frame using 8x30mm screws, ensuring that they sit flush with the frame and the door.

e Attach the tower bolts **(No.27)** to the door bar using 12x30mm screws.

26x30mm screws

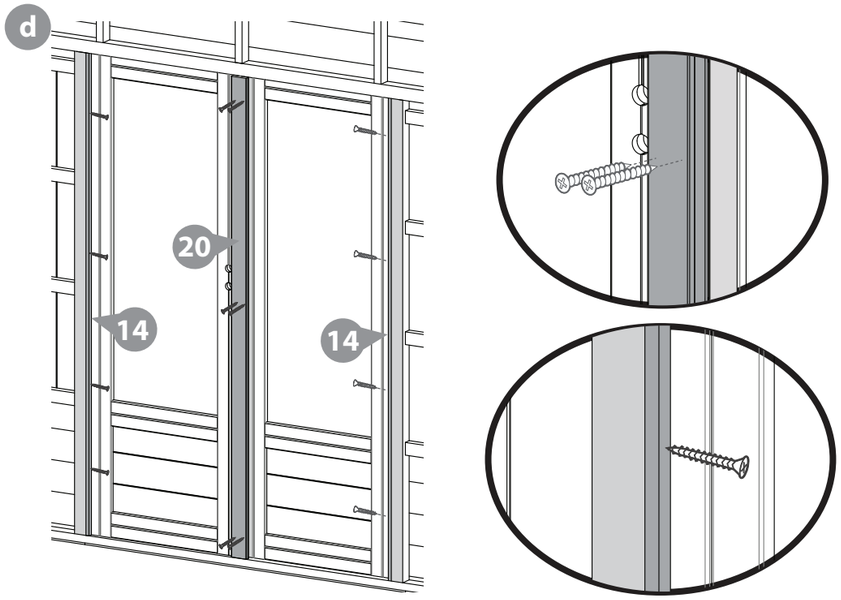

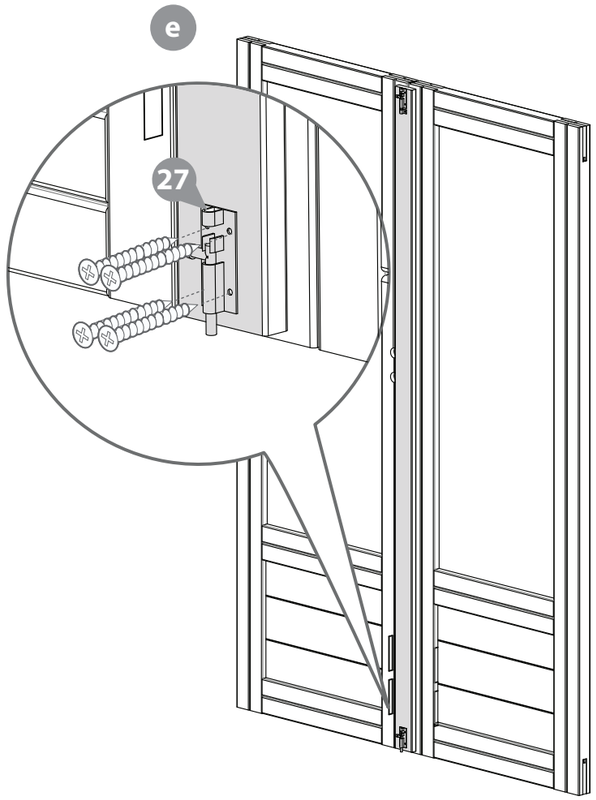

Step 3

Place the back panels (***No.4***) and the right gable (***No. 2***)onto the floor.

a Fix the panels together at the corners using 3x50mm screws.

b Do ***NOT*** secure the building to the floor until the roof is fitted.

6x50mm Screws

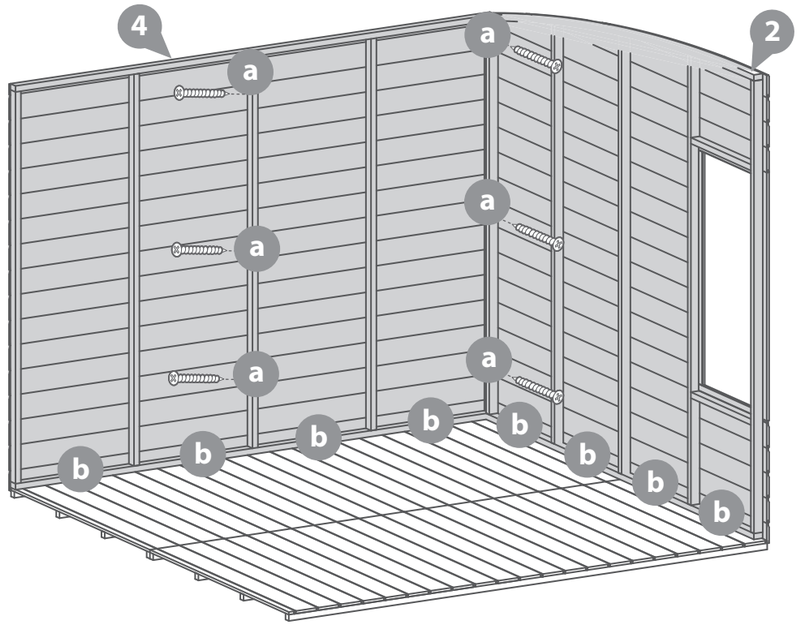

Step 4

Following the same method outlined in step 3, place the left gable (***No. 3***) onto the floor against the back panel.

a Fix the two panels together at the corners using 3x50mm screws.

b Do ***NOT*** secure the building to the floor until the roof is fitted.

3x50mm Screws

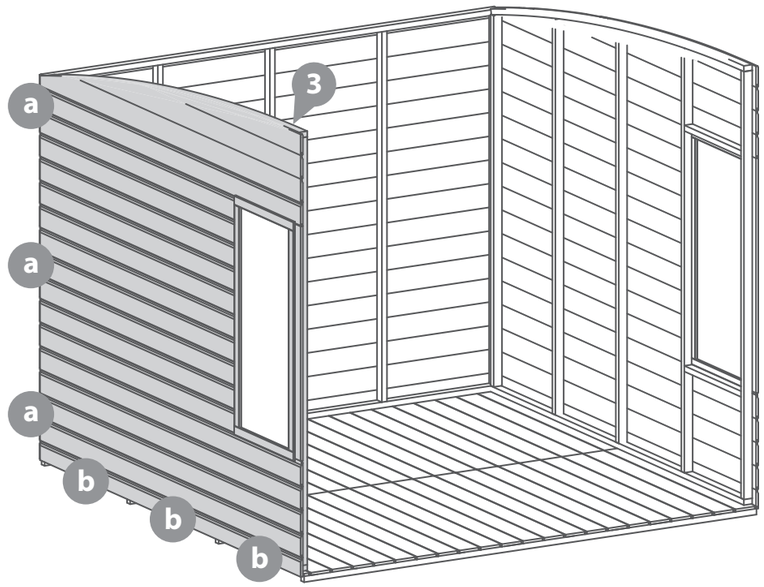

Step 5

Following the same method outlined in step 3, place the assembled door panel onto the floor in-between the gables.

a Fix the panels together at the corners using 3x50mm screws per side.

b Do ***NOT*** secure the building to the floor until the roof is fitted.

6x50mm Screws

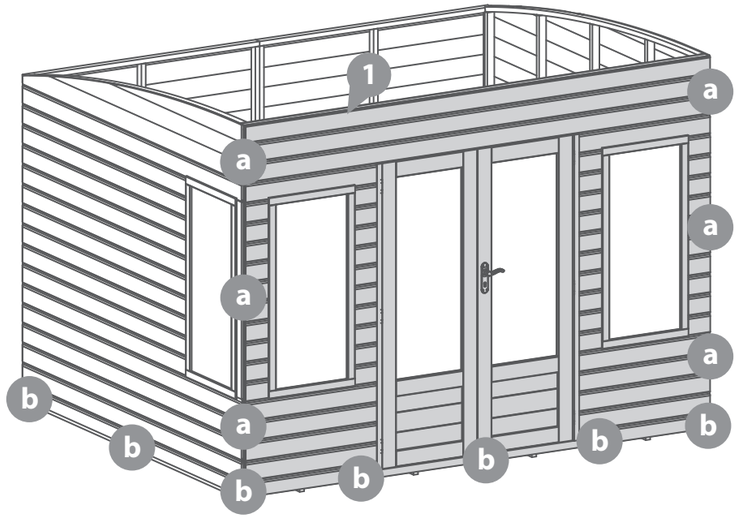

Step 6

a Place the first ridge bar **(No.9)** inside the building and line up with the upright framing on each gable.

Align the back edge of the ridge bar with the top of the gable. Once in place mark the position on both sides with a pencil.

Place the roof support block **(No. 10)** to the pencil mark and secure in place using 2x40mm screws per block.

*Repeat this process on both sides with the remaining roof support bars.

b Place the ridge bar(s) on top of the attached blocks and secure through the outside of both gables using 2x80mm screws per side.

12x40mm Screws
12x80mm Screws

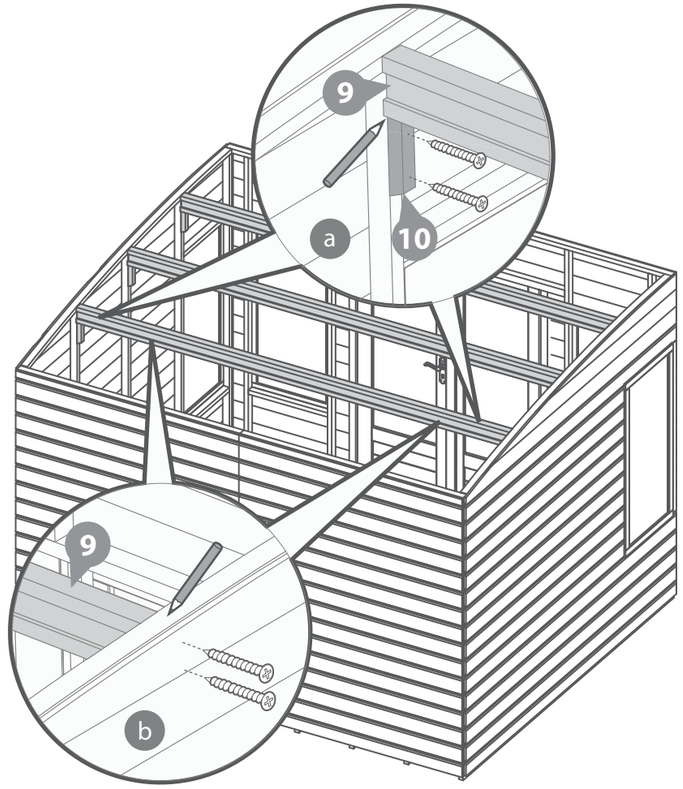

Hint:** ***When fitting the roof bar pencil mark the centre of the roof support bar and follow down onto the gable at a right angle, this will give you a guide to fix the support bars in place.

Step 7

Place the first roof panel **(No. 6)** onto the supports (making sure the roof framing sits behind the support bar) and secure with 20x40mm screws as shown in the diagram. Ensure the screws line up with the roof support bars.

Fix the roof bar to the supports where they meet (internally) using 8x40mm screws.

Repeat this process with the second roof panel.

56x40mm Screws

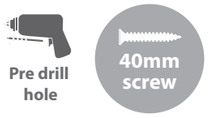

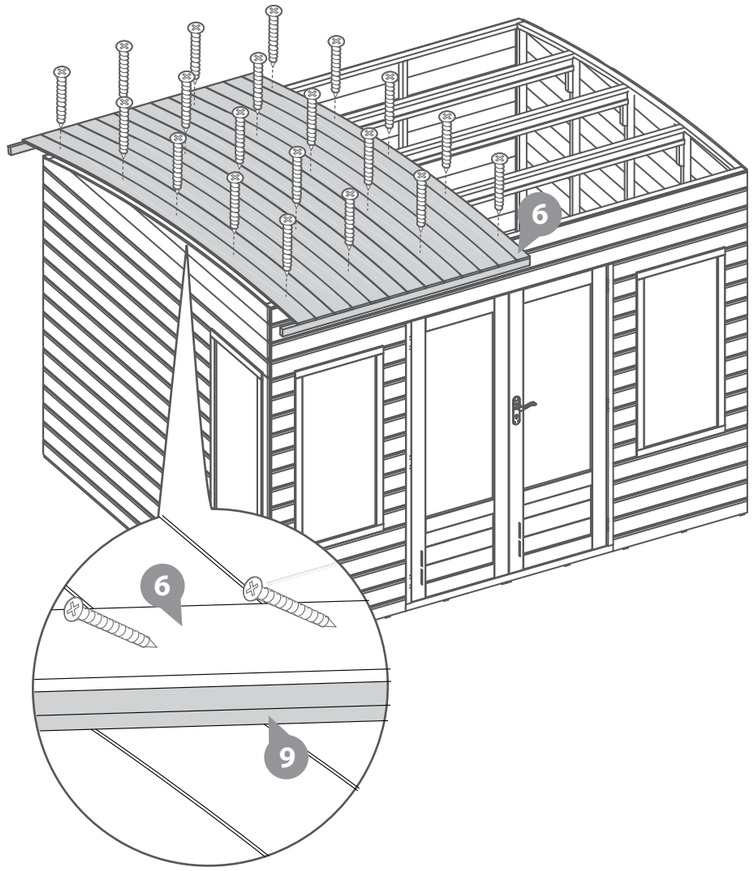

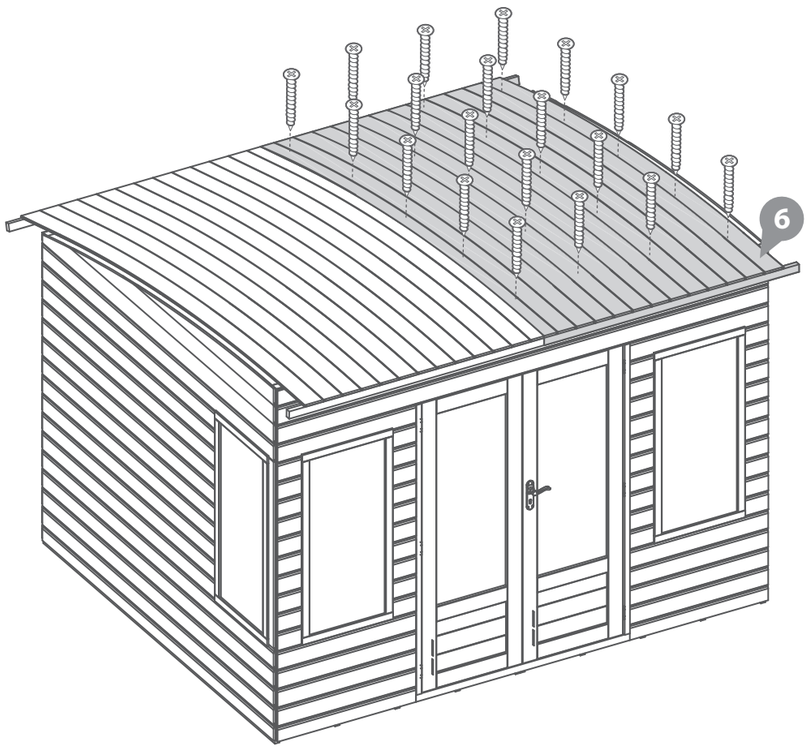

Step 8

Position the roof ends **(No. 13)** onto the roof, ensuring the tongue and groove align and the boards sit flush together.

Secure each board to the gable framing using 6x30mm screws.

12x30mm Screws

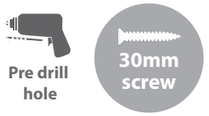

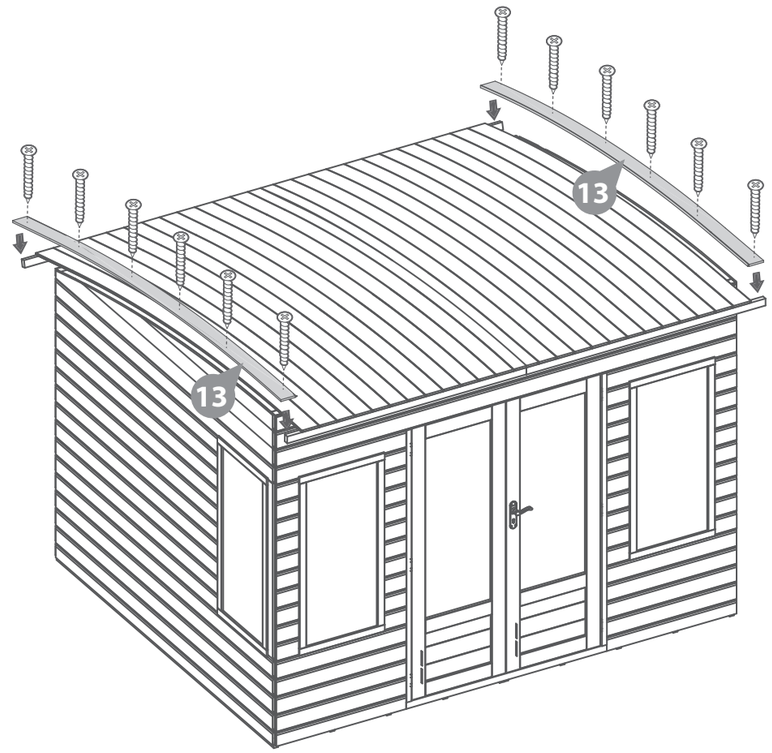

Step 9

b Secure the building to the floor using 36x50mm screws.

36x50mm Screws

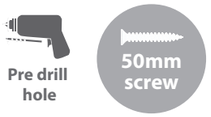

Ensure to align the screws with the floor bearers.

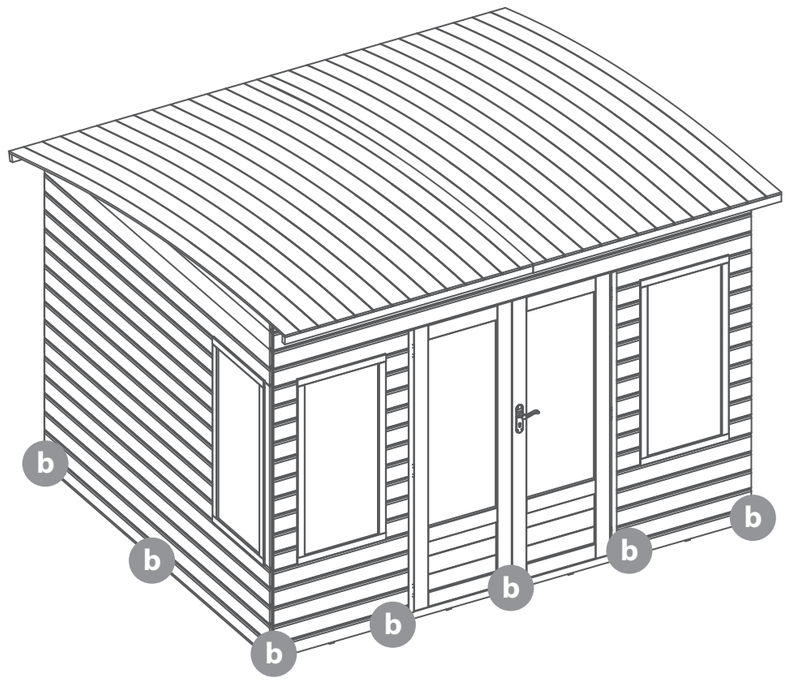

Step 10

Cut the felt **(No.28)** into 4x strips measuring:
3130mm (L) X 1000mm (W)
and lay onto the roof in the order shown in the illustration, leaving approximately 50mm of overhanging felt around the building.

Secure the felt to the building with 165x felt tacks at 100mm intervals

190x Felt Tacks

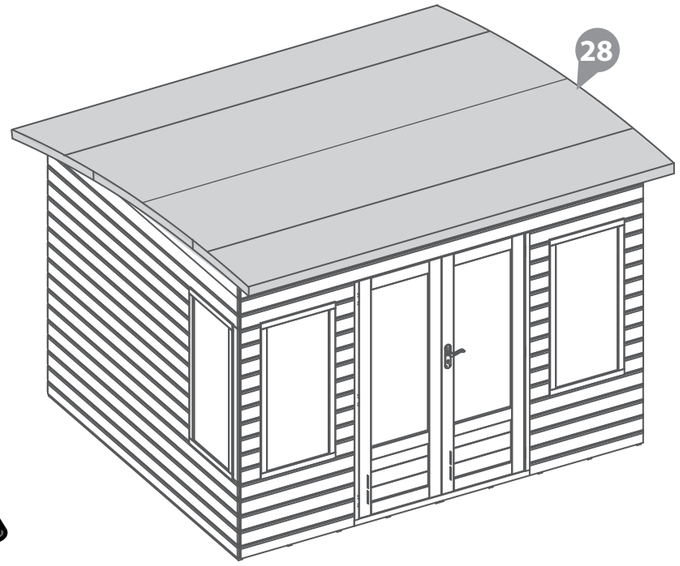

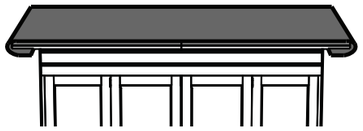

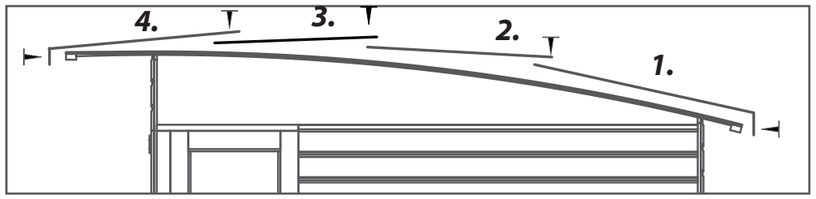

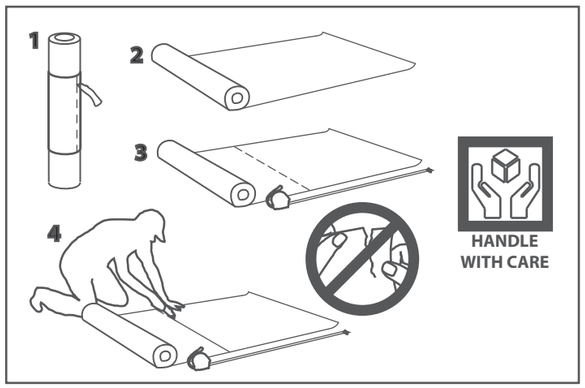

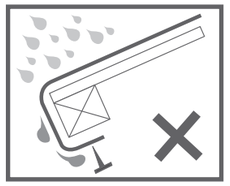

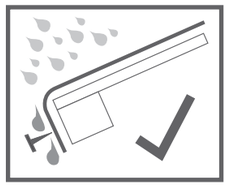

Step 11

Sandwhich the felt either side between the roof and the top **(No. 15)** and bottom **(No. 16)** roof trims, fixing each strip to the roof with 3x30mm screws

24x30mm Screws

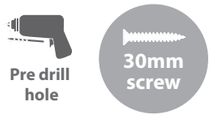

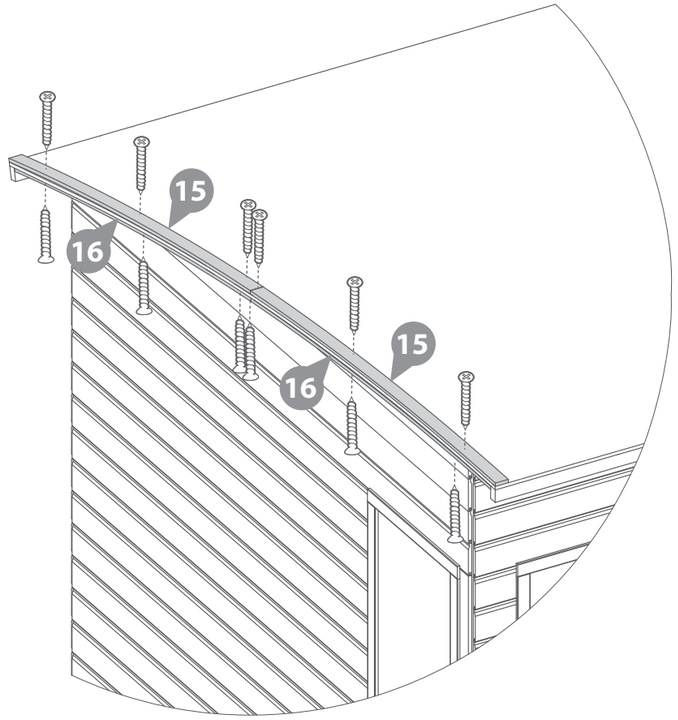

Step 12

Fix the fascia's **(No. 17)** to the front of the building using 4x40mm screws.

Attach the finial **(No. 27)** over the join in the fascia's with 2x40mm screws.

10x40mm Screws

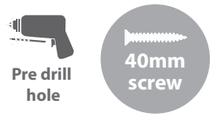

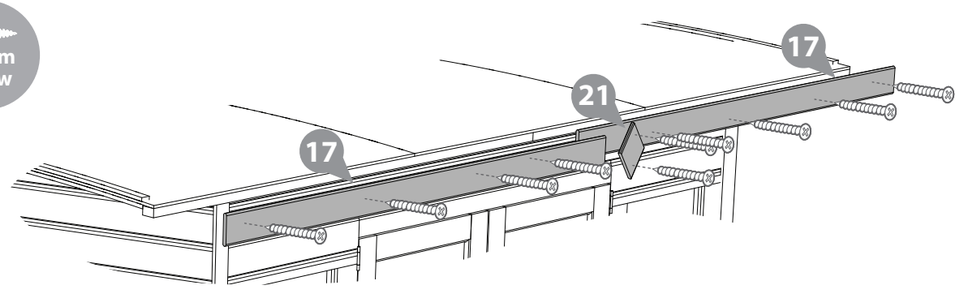

Step 13

Attach the front **(No. 18)** and rear **(No. 19)** cover trims to the building, fixing each trim using 3x30mm screws.

15x30mm Screws

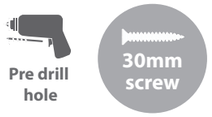

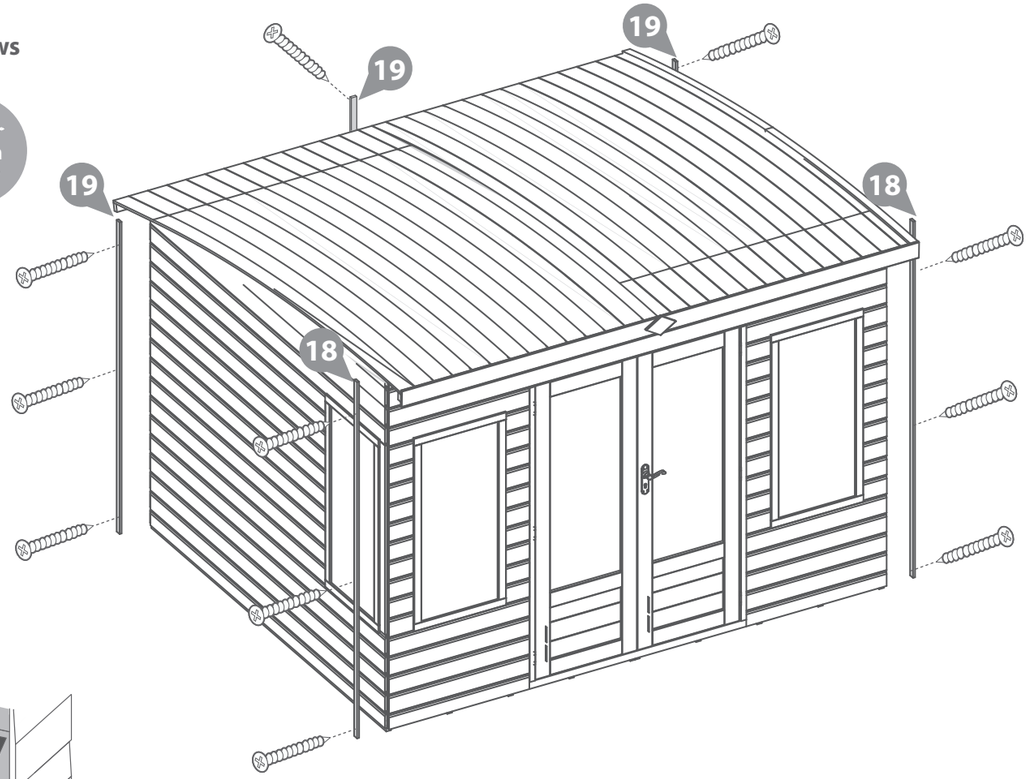

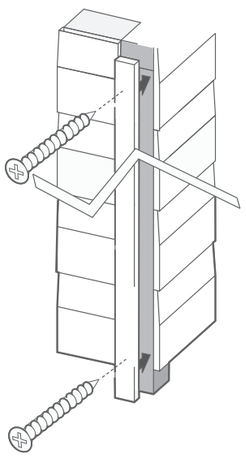

Step 14

Fix the turn button's **(No. 26)** to the top and bottom of the secondary door using 2x30mm screws.

These turn buttons help keep your doors straight during high and low levels of moisture content in the air.

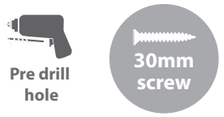

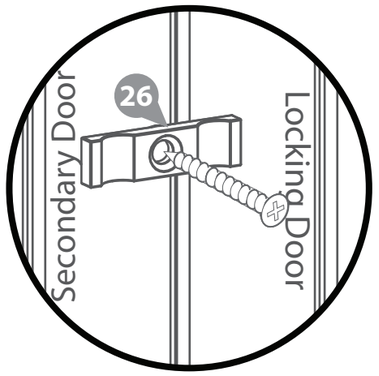

Step 15

Fix the large rain guard **(No. 11)** above the door using 4x50mm screws.

Attach the small rain guards **(No.12)** above each window using 3x50mm screws per sml rain guard.

Seal each rain guard with silicone sealant before fixing to the building.

16x50mm Screws

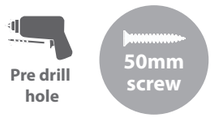

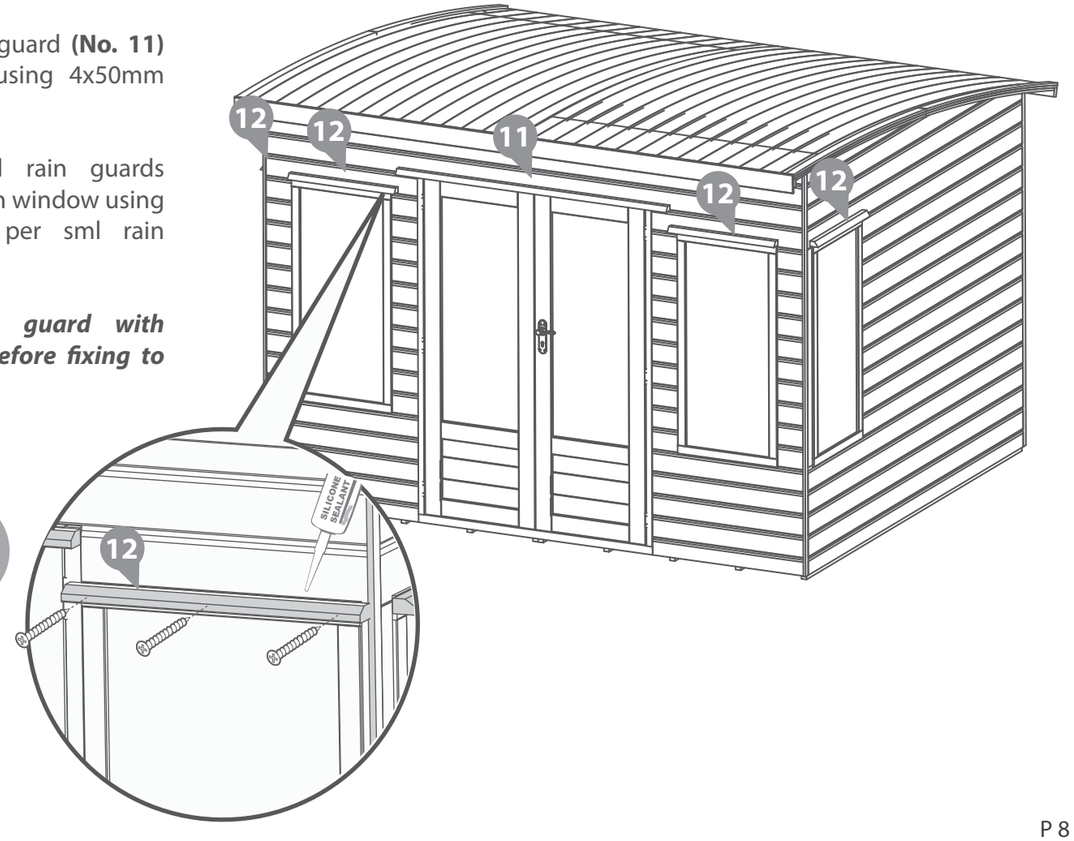

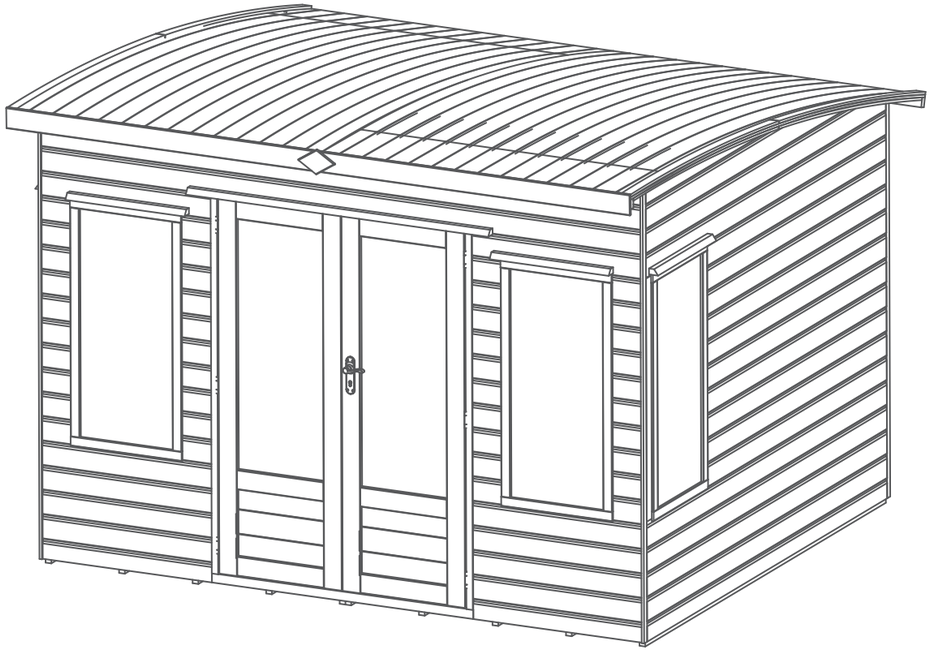

It is ESSENTIAL that you apply wood treatment immediately after the building has been assembled.

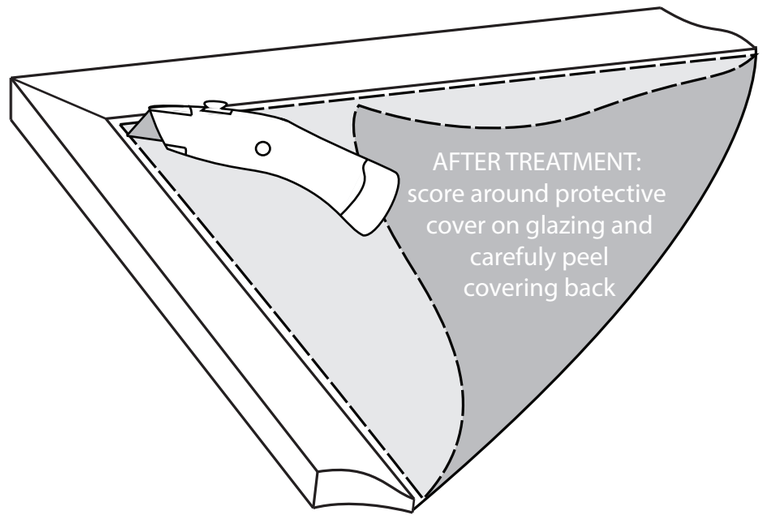
AFTER TREATMENT:
score around protective cover on glazing and carefuly peel covering back

MANUFACTURER'S RECOMMENDATIONS

All our garden buildings have been designed and manufactured with care and attention to be the perfect addition to your outdoor space. To ensure you do get the best out of your new garden building and to increase the longevity we advise that you follow the product instructions and our manufacturer's recommendations as detailed below. Thank you for choosing a Mercia Garden product!

1 Choosing the most suitable location for your garden building...

A minimum of 60cm should be left around the perimeter of your garden building to allow access for maintenance, annual treatment and to allow air flow around the building.

Where possible you should avoid placing your garden building underneath large trees to prevent the tree causing damage to the building.

2 Preparing the base for your garden building...

All our buildings must be built on a firm, level base to ensure the longevity of the building and prevent the wood from distorting. We recommend either concrete, concrete slabs or a wooden base, such as our 'Portabase'.

The base should be slightly smaller than the external measurement of the building, i.e. the cladding should overlap the base, creating a run off for water and preventing water from pooling underneath the building.

We also recommend that the floor of the garden building is a minimum of 25mm above the surrounding ground level to avoid flooding.

3 After installation...

Once your garden building has been installed it will need to be treated as soon as possible and annually to prevent the timber from deteriorating and to waterproof it. This is required to maintain the anti-rot guarantee.

Dip Treated buildings - Require a preservative treatment to protect against rot and decay and a waterproof treatment to prevent water ingress
Pressure Treated buildings - Require a waterproof treatment to prevent water ingress
Log Cabins/Insulated Garden Rooms - Are supplied untreated and require a preservative and waterproofing treatment

We also recommend using a silicon sealant on the inside and outside of the windows as soon as possible after assembly and treatment to fully seal the windows.

Roofing felt/covering should be checked annually and replaced or fixed accordingly.

4 General maintenance and wood characteristics

As wood is a natural material it may be affected by the following:

Shrinkage and warping - The timber used in the construction of your garden building will have retained some of its natural moisture content. The moisture content of the timber will vary, depending upon prevailing environmental conditions, which will result in the components either naturally expanding or contracting. As the components dry out shrinkage may occur. A good waterproofing treatment from the start is the best protection to minimise the effect of moisture loss/intake.

In extended periods of very warm weather getting some moisture to the building will help the overall balance. You can do this by spraying it down lightly with a garden hose. In contrast after snow fall try to remove the snow as best as possible from the roof to prevent moisture intake and to remove the extra weight.

Top tip - using a garden brush will help you to reach the highest part of the building to remove snow and any debris left from bad weather.

Damp and mould - During the winter months, cold and damp conditions can result in an increased amount of moisture within your garden building, especially when used infrequently. Condensation can form on the timber and other items stored within your garden building. If left this moisture is likely to cause mould and mildew. To prevent the build-up of moisture, we recommend leaving the door or windows of your building open from time to time, to allow the fresh air to circulate. We also advise against storing wet or damp items in your garden building as this will also increase the level of moisture in the building. If mould or mildew does start to form within your building we recommend using an anti-mould cleaner to remove it and to prevent it spreading, which if left untreated could permanently damage your garden building.

Splits, cracks and knots - You may notice small splits and cracks in some components or holes may appear where knots shrink and fall out. This will not affect the structure of your Garden building however if you wish to fill them this can be easily done using any good quality wood filler.

Sap - is naturally occurring in wood and may appear in some boards of your garden building. If you wish to remove the sap, we advise waiting until it is dry and then using a sharp knife to carefully remove it. If the removal of the sap causes a hole in the timber, we recommend using a good quality wood filler to fill it.

For more handy hints and tips on how to care and maintain your garden building please refer to the MGP Customer Portal at www.mgplogistics.co.uk

Any further questions?

Contact our Customer Service Team on: 01636 821215

Mercia Garden Products Limited, Sutton On Trent, Newark, Nottinghamshire, NG23 6QN
www.merciagardenproducts.co.uk

WARRANTY AND GUARANTEE

1 Manufacturer's Warranty

All Mercia Garden Products are supplied with a 1 year warranty on all parts against manufacturing defects.
This warranty does not cover movement, warping or splitting of timber products over time.

This warranty will be voided if any of the following occur:

1. The building has been customised or modified/adapted in any way.
2. The person claiming is not the original purchaser of the building.
3. Any damage has been caused by or as a result of misuse.
4. The building has not been maintained and cared for in accordance to our advisories and manufacturer's recommendations.
5. The building has not been treated annually or as per the manufacturer's recommendations, please ensure receipts are kept to validate this claim.
6. The building has not been erected, fitted or installed as per the supplier instructions.
7. The building has not been erected on a suitable sized firm flat, solid level concrete/slab base or placed on pressure treated bearers.
8. The building is or has been placed with 2 feet (60cm) of any obstructions (walls, trees, plants, fences etc.) which can allow moisture to penetrate the timber.
9. The roofing felt has been incorrectly fitted or damaged allowing water ingress, or not properly maintained.
10. Any windows and joints have not been sealed, inside and out, with silicone or other watertight sealant.
11. Any timber has been cut, pierced or drilled without subsequent application of approved cut-end treatment.

ANTI ROT GUARANTEE 10 YEARS ANTI ROT GUARANTEE

REGISTER FOR YOUR
ANTI-ROT
GUARANTEE TODAY

PLEASE SCAN HERE:

2 Anti-rot Guarantee

Mercia Garden Products offer a 10 year anti-rot guarantee on all dip treated (a preparatory treatment) and 15 years on all pressure treated products. This guarantee covers solid timber against rot, decay, blue stain and insect attack.
To validate the guarantee the building must be treated with a recognised wood preserver/water proof top coat (as detailed within manufacturer's recommendations) as soon as possible after assembly and annually thereafter.
This guarantee does not cover movement, warping or splitting of timber products over time.

This guarantee will be voided if any of the following occur:

1. The building has been customised or modified/adapted in any way.
2. The person claiming is not the original purchaser of the building.
3. Any damage is caused by or as a result of misuse.
4. The building has not been maintained and cared for in accordance to our advisories and manufacturer's recommendations.
5. The building has not been treated annually or as per the manufacturer's recommendations, please ensure receipts are kept to validate this claim.
6. The building has not been erected, fitted or installed as per the supplier instructions.
7. The building has not been erected on a suitable sized firm flat, solid level concrete/slab base or placed on pressure treated bearers.
8. The building is or has been placed with 2 feet (60cm) of any obstructions (walls, trees, plants, fences etc.) which can allow moisture to penetrate the timber.
9. The roofing felt has been incorrectly fitted or damaged allowing water ingress, or not properly maintained.
10. Any windows and joints have not been sealed, inside and out, with silicone or other watertight sealant.
11. Any timber has been cut, pierced or drilled without subsequent application of approved cut-end treatment.

Mercia Garden Products Limited, Sutton On Trent, Newark, Nottinghamshire, NG23 6QN
www.merciagardenproducts.co.uk