01OVLPA0305SDNW-V1

3X5 OVERLAP APEX SHED.

BEFORE YOU START PLEASE READ INSTRUCTIONS CAREFULLY
- Check the pack and make sure you have all the items listed in the parts list provided.
- When you are ready to start, make sure you have the right tools at hand (not supplied - see the equipment list on next page).
- Ensure there is plenty of space and a clean dry area for assembly.
- Ensure you have enough time to build the product to ensure the building is water tight.

LOCATION FOR YOUR GARDEN BUILDING
A minimum of 600mm should be left around the perimeter of your garden building to allow access for maintenance, annual treatment and to allow air flow around the building.

Where possible you should avoid placing your garden building underneath large trees to prevent the tree causing damage to the building.

TIMBER
As with all natural materials, timber can be affected during various weather conditions. For the duration of heavy or extended periods of rain, swelling of the wood panels may occur. Warping of the wood may also occur during excessive dry spells due to an interior moisture loss. Unfortunately, these processes cannot be avoided but can be helped. It is suggested that the outdoor building is sprayed with water during extended periods of warm sunshine and sheltered as much as possible during rain or snow.

Once your garden building has been installed it will need to be treated within 14 days (weather permitting) and annually to prevent the timber from deteriorating and to waterproof it. This is required to maintain the anti-rot guarantee.

Dip Treated buildings - Require a preservative treatment to protect against rot and decay and a waterproof treatment to prevent water ingress
Pressure Treated buildings - Require a waterproof treatment to prevent water ingress
Log Cabins/Insulated Garden Rooms - Are supplied untreated and require a preservative and waterproofing treatment.

BUILDING A BASE
When thinking about where the building and where the base is going to be constructed:
Ensure that there will be access to all sides for maintenance work and annual treatment.

Ensure the base is level and is built on firm ground, to prevent distortion. Refer to diagrams for the base dimensions, The base should be slightly smaller than the external measurement of the building, i.e. The cladding should overlap the base, creating a run off for water. It is also recommended that the floor be at least 25mm above the surrounding ground level to avoid flooding.

TYPES OF BASE
- Concrete 75mm laid on top of 75mm hard-core.
- Slabs laid on 50mm of sharp sand.
- Wooden base.

Whilst all products manufactured are made to the highest standards of safety and in the case of children's products independently tested to EN71 level, we cannot accept responsibility for your safety whilst erecting or using this product.

All buildings should be erected by two adults

2mm Drill bit

For ease of assembly, you MUST pilot drill all screw holes and ensure all screw heads are countersunk.

For ease of assembly, you will need a tape measure to check dimensions of components.

Winter = High Moisture = Expansion
Summer = Low Moisture = Contraction

CAUTION
Every effort has been made during the manufacturing process to eliminate the prospect of splinters on rough surfaces of the timber. You are strongly advised to wear gloves when working with or handling rough sawn timber.

To identify the fixings required for each step use a measuring tape.

Protim Aquatan T5 (621)

Your building has been dip treated with Aquatan.

Aquatan is a water-based concentrate which is diluted with water, the building as been treated by the correct application of Aquatan solution and then allowed to dry.

Aquatan is a decorative finish to colour the wood, which is applied industrially to timber fence panels and garden buildings.

Aquatan undiluted contains: boric acid, sodium hydroxide 32% solution, aqueos mixture of sodium dioctyl sulphosuccinat and alcohols: 2, 4, 6-trichlorophenol.

ANTI ROT GUARANTEE 10 YEARS ANTI ROT GUARANTEE

REGISTER FOR YOUR
ANTI-ROT
GUARANTEE TODAY

PLEASE SCAN HERE:

In all instances for assistance with your product, please contact us via our customer portal: **https://www.mgplogistics.co.uk/**

Mercia Garden Products Limited,
Sutton On Trent,
Newark,
Nottinghamshire,
NG23 6QN

TO DO LIST

- ☐ Find a suitable location to build *(see front cover for further information).*
- ☐ Build a base *(see front cover for further information).*
- ☐ Check the base is flat, level, clear of debris and has 60cm clearance on all sides.
- ☐ Check you have the required equipment.
- ☐ Check you have all the product items listed *(if you have missing or damaged parts please contact the customer services department, see front cover for contact details).*
- ☐ Install the product as per the step by step instructions within this pack.
- ☐ Prepare the product ready for treatment.
- ☐ Apply a preserving and a waterproofing treatment within 14 days *(weather permitting)* of installation *(pressure treated products do not require a preserver)*.
- ☐ Register for your anti rot guarantee *(scan the QR below).*
- ☐ Tidy the build area and dispose of any remaining parts responsibly.
- ☐ Maintain your building *(see the manufacturers recommendations at the back of this pack).*

EQUIPMENT LIST

- ☐ Hammer
- ☐ Flat Head Screwdriver
- ☐ Drill
- ☐ Drill Bit Set
- ☐ Phillips and Slotted Bit Sets
- ☐ Tape Measure
- ☐ Hand Saw
- ☐ Spirit Level
- ☐ Ladders/Steps
- ☐ Stanley Knife/Cutting Tool
- ☐ Sand Paper
- ☐ Gloves
- ☐ Silicone (For Windows Only)
- ☐ Wood Filler (Optional)
- ☐ Timber Preservative Treatment *(not pressure treated products)*
- ☐ Timber Water Proofing Treatment
- ☐ Treatment Mixing Stick
- ☐ Paint Brush/Sprayer/Roller

NEED EXTRA SUPPORT

If you are unsure that your base preparation will be suitable, please contact us on 01636 821215 to discuss this further.

Alternatively, you can visit our website or MGP Logistics Online Portal for some further sheducation.

Website:
https://www.merciagardenproducts.co.uk/sheducation

MGP Logistics Online Portal:
https://www.mgplogistics.co.uk/

Here you will find plenty of useful information that'll help with most pre-installation and maintenance queries.

PLEASE SCAN HERE:

ANY QUESTIONS?
Scan the QR code to contact us via our customer portal.

NOTES

ACCESSING VIDEO GUIDES...

Some steps within this set of instructions come with an added video guide for your convenience. These can be accessed via the QR code and used to aid you in constructing that step. See below for how to use.

You can also find all the videos on our youtube channel:
https://www.youtube.com/@merciagardenproducts8716/videos

1.Find the QR code within the instruction step...

Within the instruction step, there will be an icon in the top right that has a QR code in. This is where the video can be accessed from.
Please note: not every step has a video guide.

2. Open camera app...

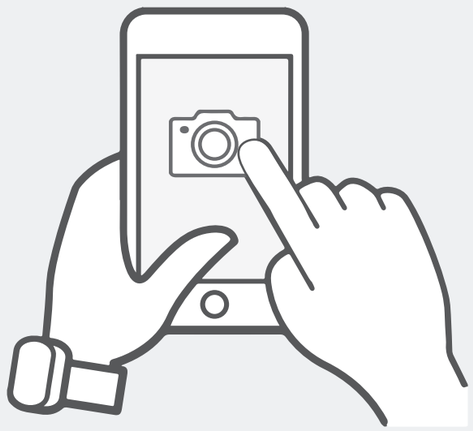

On your personal smart device (phone, tablet etc), open your camera app or QR code scanner app.

ACCESSING VIDEO GUIDES...

3. Scan QR code...

To scan the QR code, hold the camera over the QR code so that it can be seen on the screen. Once the QR code has been registered, follow the prompts on your device to open the video. (This will vary depending on your device.)
Please note: Ensure to use the back camera of your smart device as this will scan the QR code more accurately.

4. Watch the video...

The video guide will now be displayed on your smart device.

Disclaimer: *The garden building constructed in the video guides may be constructed differently to your building. Please ensure to read your instructions carefully to avoid error.*

Before assembly please make sure you have a suitable base ready to erect your building

MADE IN GREAT BRITAIN

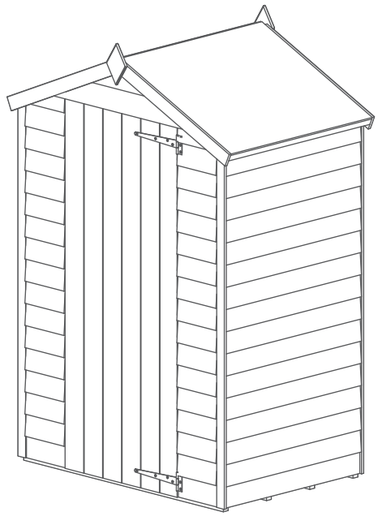

Overall Dimensions:
Width = 859mm
Depth = 1604mm
Height = 1856mm

Base Dimensions:
Width = 804mm
Depth = 1470mm

Building Contents:

1

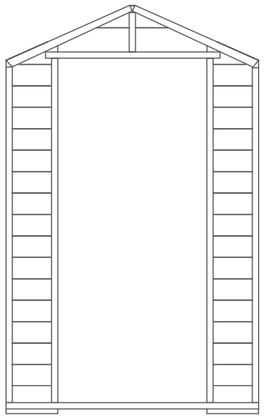

Door Gable QTY 1
AI-01OVLPDG1410X1887-V1

2

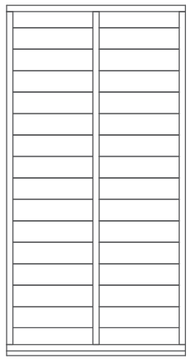

Plain Side QTY 2
AI-01OVLPPS800X1567-V1

3

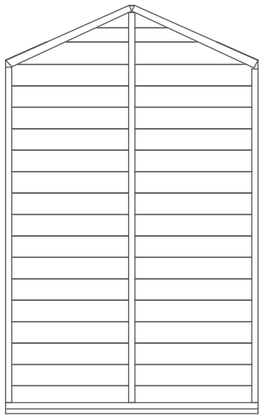

Plain Gable QTY 1
AI-01OVLPPG1410X1887-V1

4

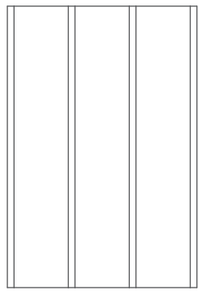

Floor QTY 1
AI-01OSBF1460X795-V1

5

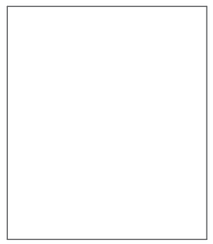

Roof QTY 2
PI-03-0331

6

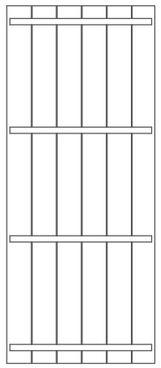

Door QTY 1
AI-01MBDR1660X660-V1

7

Ridge Bar - 28x28x744mm QTY 1
F2828-744mm

8

Eave Frame - 28x28x835mm QTY 2
F2828-835mm

9

Fascia - 12x60x851mm QTY 4
S1260-851mm

10

Door Strip - 12x28x1590mm QTY 2
S1228-1590mm

11

Cover Trim - 12x45x1560mm QTY 4
S1245-1560mm

12

Finial QTY 2
Shed Diamond Finial

13

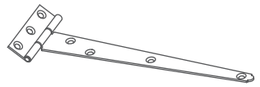

T-hinge QTY 2
PI-02-1041

14

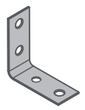

"L" Bracket QTY 2
PI-07-0012

15

Turn Button QTY 2
PI-07-0034

16

Felt

Nail Bag

There may be more screws than required in the nail bag.

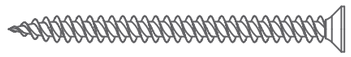

50mm Screw x 24

20mm Screw x 6

30mm Screw x 74

Felt Tacks x 34

Pre Assembly

Before assembling remove the transportation blocks from the bottom of each panel.

Take care removing the blocks as to not damage the panels. Tap with a flat headed screwdriver and hammer.

Dispose of the blocks once removed.

PLEASE SCAN HERE:

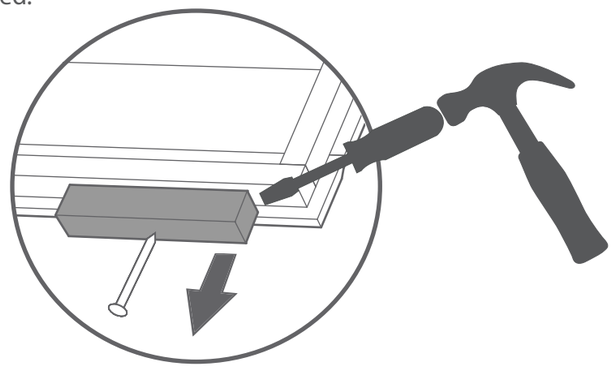

Step 1
Parts Needed - No. 1 QTY 1
No. 6 QTY 1
No. 13 QTY 2

IMPORTANT: ***Pre-drill before fixing screws.***

Rest the door **(No. 6)** into the door gable **(No. 1)** opening, ensuring there is equal spacing on each side.

Secure into place with 2 x T-hinges **(No. 13)** using 7x30mm per hinge.

Ensure to align the hinges and screws with the framing on the back of the door.

14x30mm Screws

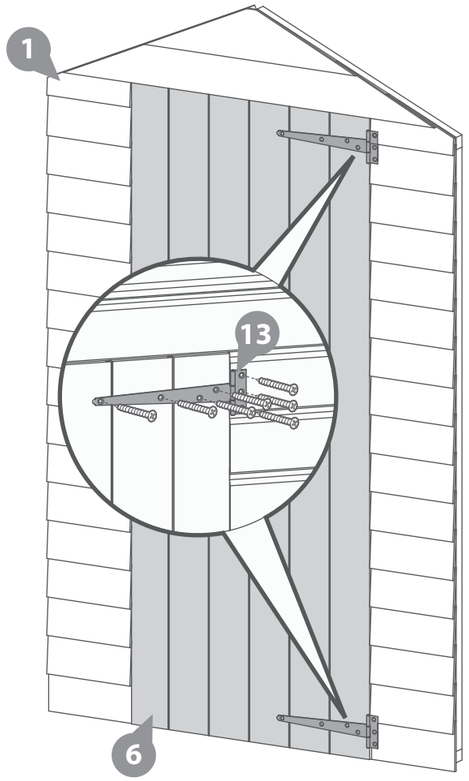

PLEASE SCAN HERE:

Step 2
Parts Needed - No. 4 QTY 1

IMPORTANT: ***Pre-drill before fixing screws.***

Place the Floor **(No. 4)** onto a firm and level base. Ensure your base has suitable drainage and is free from areas where standing water can collect.

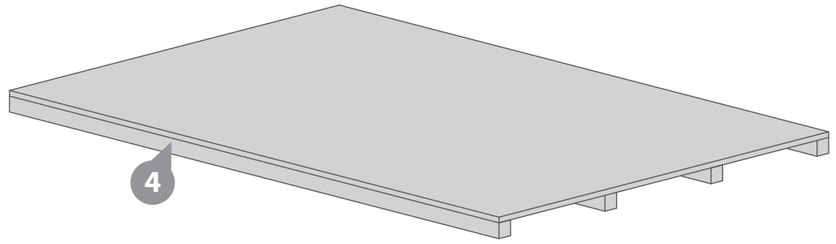

Step 3
Parts Needed - No. 2 QTY 1
No. 3 QTY 1

IMPORTANT: ***Pre-drill before fixing screws.***

Sit the Plain Gable **(No.3)** and the first Plain Side **(No. 2)** onto the floor.

Ensure the plain gable sits inside the plain side.

Fix the panels at the corner using 3x50mm screws.

Do NOT secure the building to the floor until the roof has been fitted.

3x50mm Screws

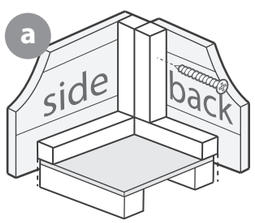

Step 4
Parts Needed - No. 1 QTY 1
No. 2 QTY 1

Rest the assembled door gable **(No.1)** and the second plain side **(No. 2)** onto the floor.

Ensure the door gable sits inside the plain sides.

Fix the panels at the corner using 9x50mm screws.

Do NOT secure the building to the floor until the roof has been fitted.

9x50mm Screws

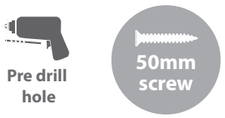

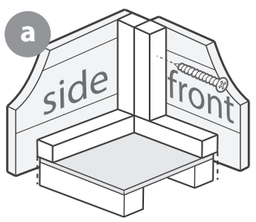

IMPORTANT: ***Pre-drill before fixing screws.***

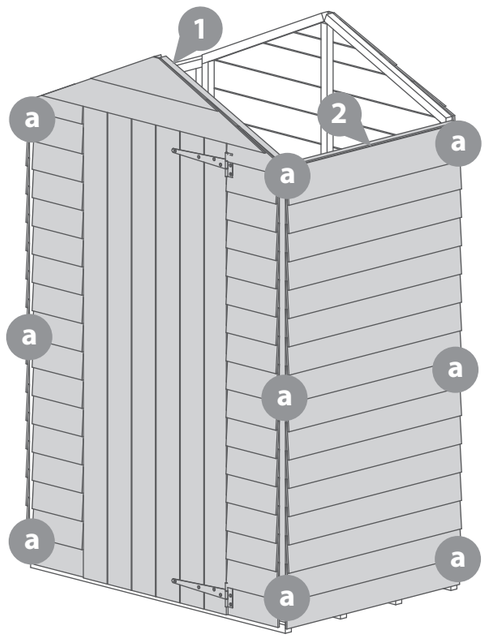

Step 5
Parts Needed - No. 7 QTY 1
No. 14 QTY 2

a Attach the "L" brackets **(No. 14)** to each end of the ridge bar **(No. 7)**, ensuring the backs are flush with the edge of the framing using 2x20mm screws per "L" bracket.

b Locate the assembled Ridge Bar between the central upright of the gables.

Fix to both gables using the "L" brackes using 2x30mm screws per side.

4x20mm Screws
4x30mm Screws

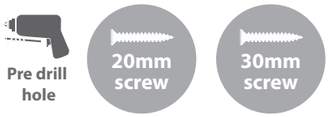

IMPORTANT: ***Pre-drill before fixing screws.***

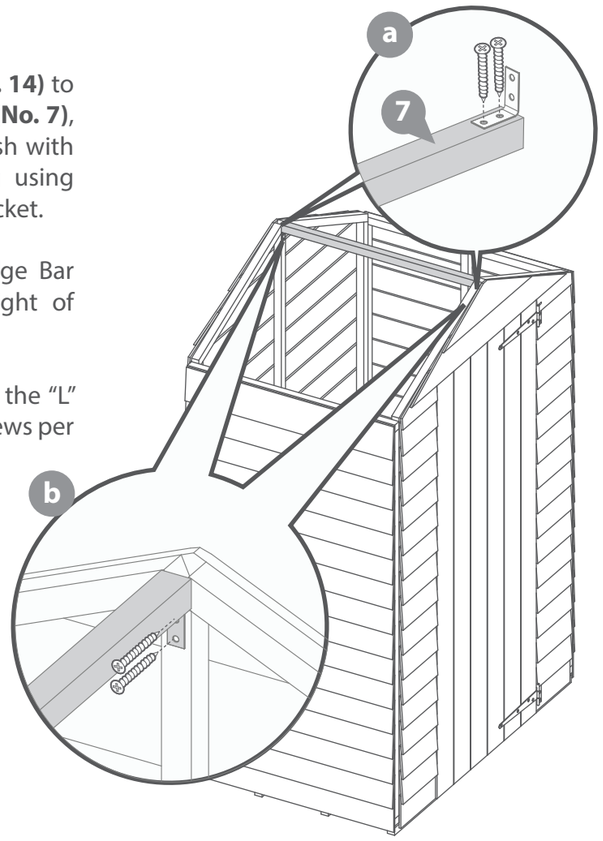

PLEASE SCAN HERE:

Step 6
Parts Needed - No. 5 QTY 2
No. 8 QTY 2

Attach an Eave frame **(No. 8)** to each roof sheet **(No. 5)** using 3x30mm screws, as shown in the illustration. Ensure the framing is flush to the ends and side of the Roof sheet.

Locate the assembled Roof sheets onto the gables, and secure each sheet to the building using 8x30mm screws, ensuring there is no more than 300mm between each screw.

22x30mm Screws

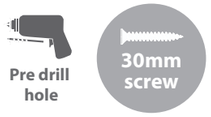

IMPORTANT: ***Pre-drill before fixing screws.***

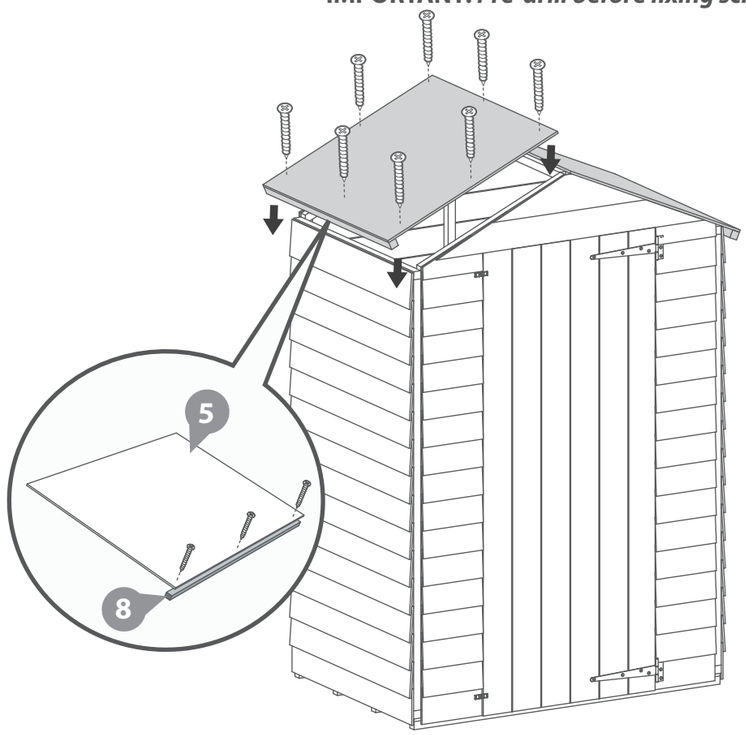

Step 7

Once the roof has been fixed into position, secure the building to the floor using 12x50mm screws.

Ensure to align the screws with the floor bearers.

12x50mm Screws

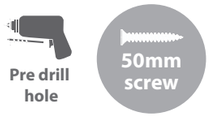

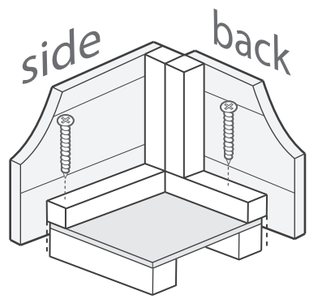

IMPORTANT: ***Pre-drill before fixing screws.***

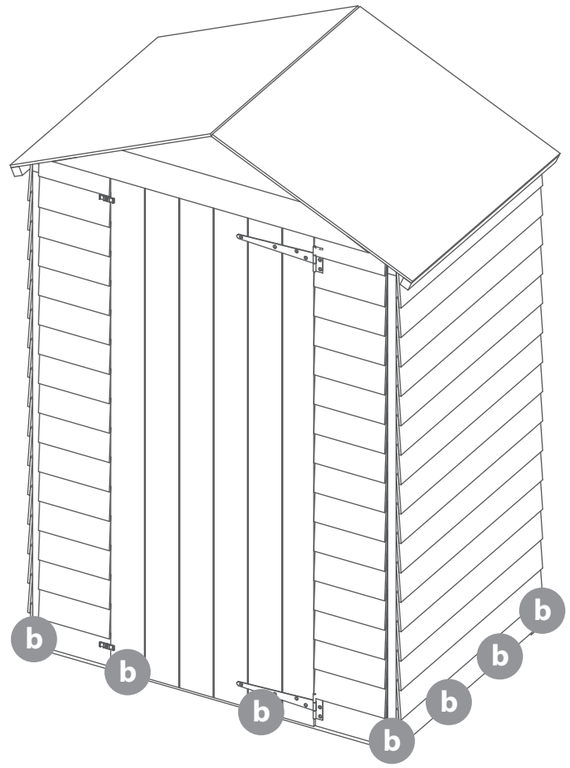

Step 8
Parts Needed - No. 16 QTY 1

Cut the felt into 1 sheet measuring ***1413mm (L) x 1000mm (W)*** and lay onto the roof, allowing approximately 50mm of overhang around the building.

Fix the felt into position using felt tacks at 100mm intervals.

32 x Felt Tacks

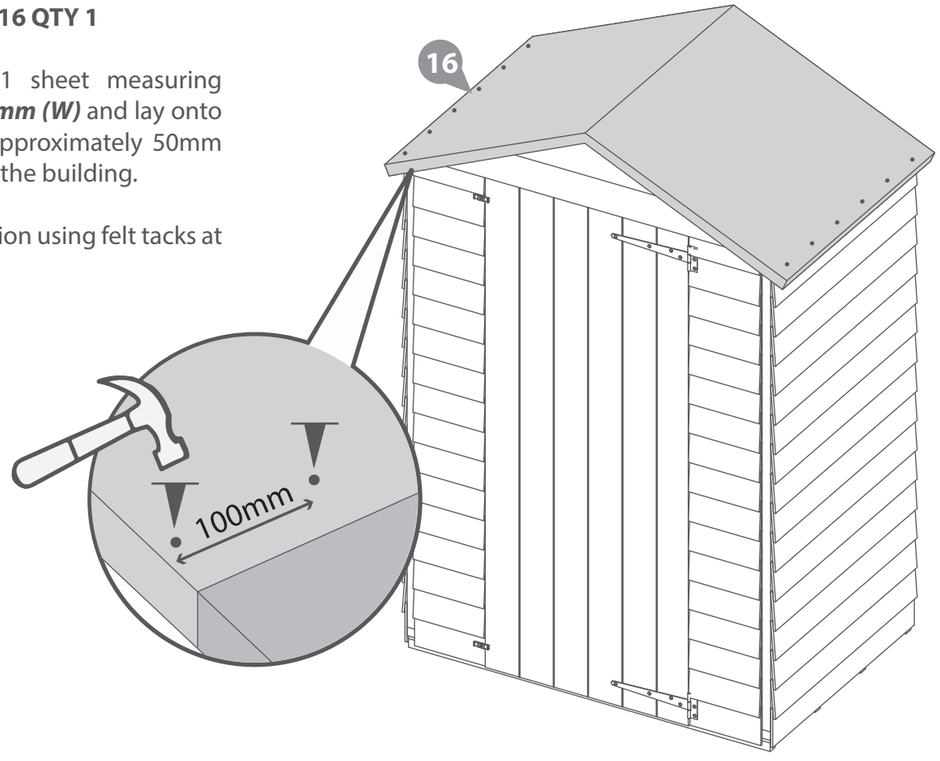

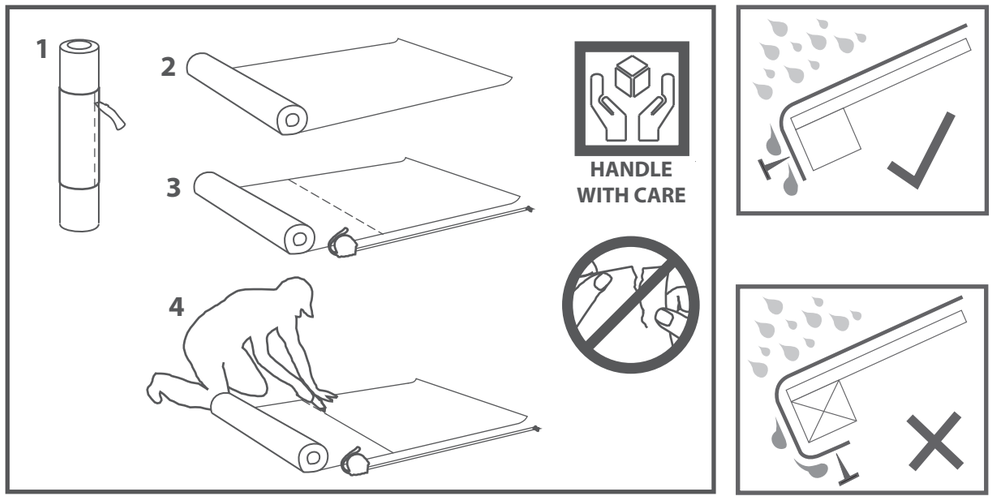

Step 9
Parts Needed - No. 11 QTY 4

Fix the cover trims **(No. 11)** to the corners of the building, securing each trim using 3x30mm screws.

12x30mm Screws

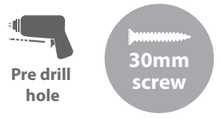

IMPORTANT: ***Pre-drill before fixing screws.***

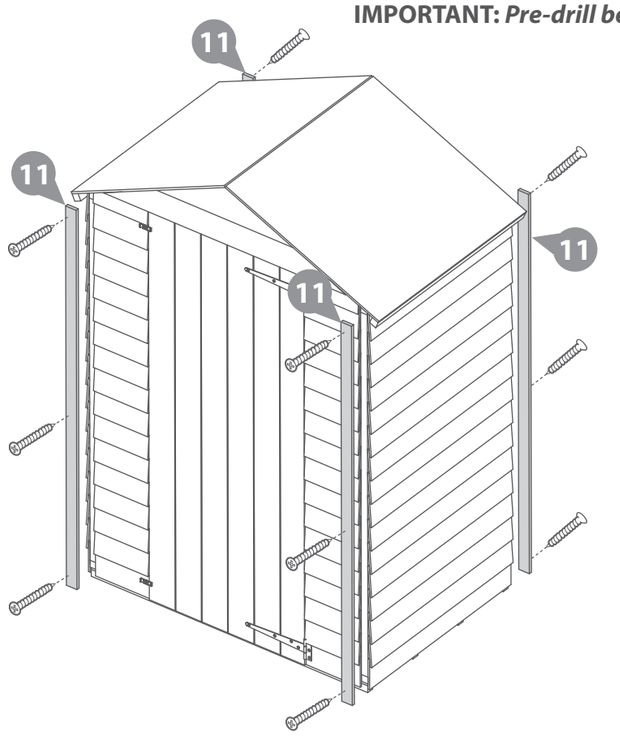

Step 10
Parts Needed - No. 9 QTY 4
No. 12 QTY 2

Attach the Fascia's **(No. 9)** to the front and back of the building using 2x30mm screws per Fascia.

****Ensure to trap the felt between the fascia's and the building.***

Locate the Finial's **(No. 12)** centrally on top of the Fascias and fix in place using 2x30mm screws per Finial.

12x30mm Screws

IMPORTANT: ***Pre-drill before fixing screws.***

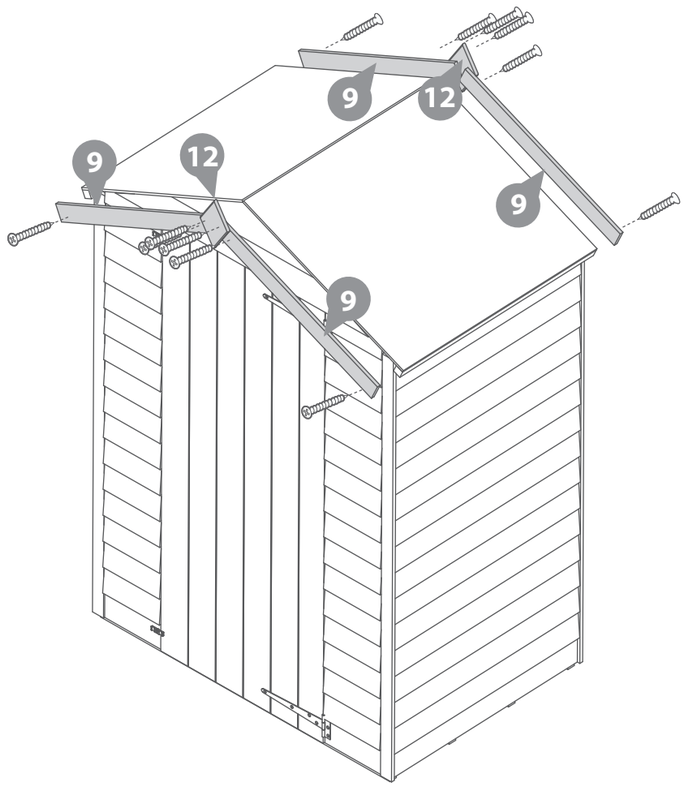

Step 11
Parts Needed - No. 10 QTY 2

Locate the door strips **(No. 10)** to the inside of the door gable, as shown.

Fix each strip into place using 4x30mm screws.

8x30mm Screws

IMPORTANT: ***Pre-drill before fixing screws.***

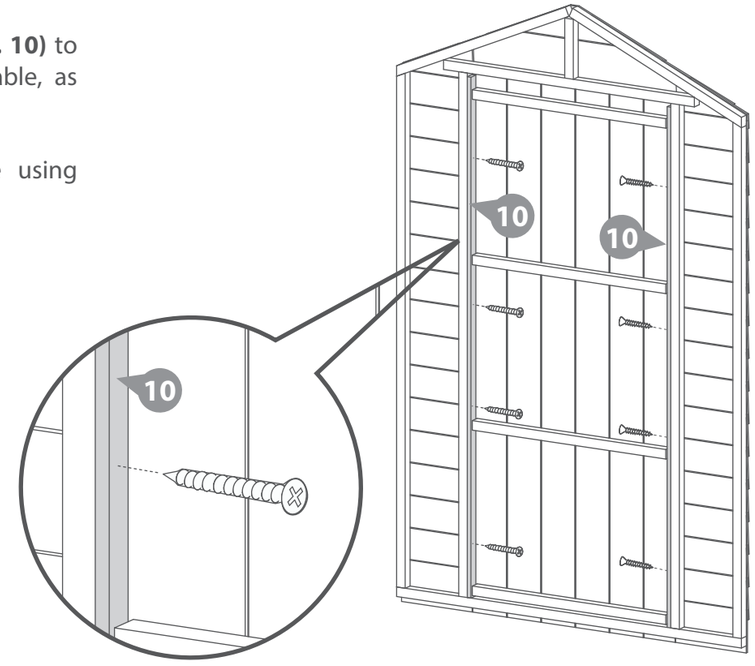

Step 12
Parts Needed - No. 15 QTY 2

Locate a the Turn Buttons **(No. 15)** to the top and bottom of the Door Gable, as shown in the illustration.

Fix in place using 1x30mm screw per Turn Button.

2x30mm Screws

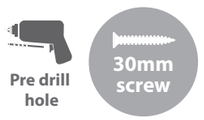

IMPORTANT: ***Pre-drill before fixing screws.***

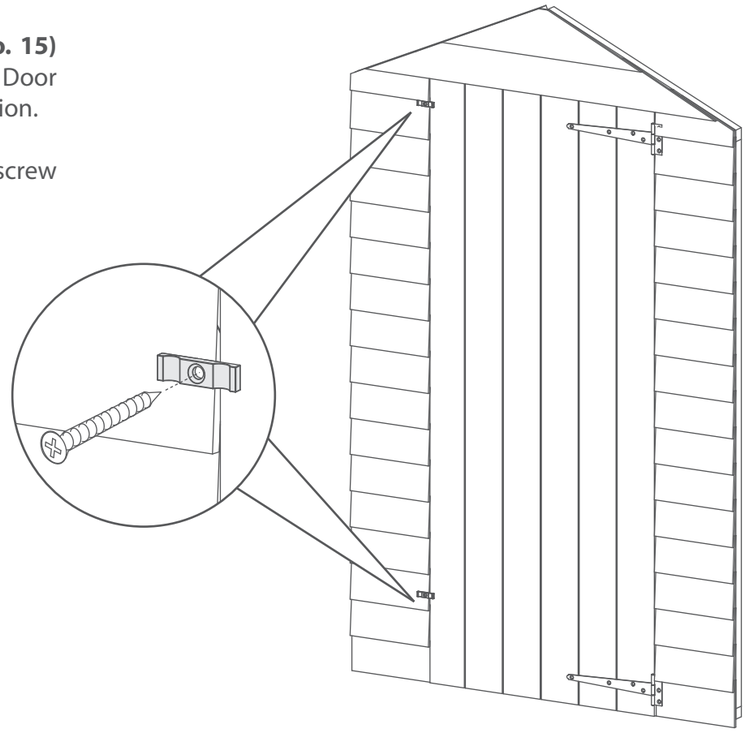

LEAVE US A REVIEW...

Want to share your experience with us?
Leave us a review on Feefo, TrustPilot or Google.

Your reviews help other people find and trust our business, as well as helping to play an important role in our growth and improvement!

HOW TO TREAT YOUR NEW GARDEN BUILDING

Please retain product label and instructions for future reference

TREATING YOUR GARDEN BUILDING

Preservation of wood that's outdoors is vital. A little early care will help protect your garden building, improve its appearance and ensure maximum longevity. Insects, moisture, salt, and changing weather can have dramatic effects on the stability and appearance of your garden building. Once your building is installed, you've checked it over and you're happy with it, you can take a few basic precautions to prepare it for the elements. Treating your garden building helps prevent decay and, by repelling water, discourages the growth of moulds and fungi that could jeopardise the structural integrity of the wood.

Dip Treated buildings - Require a preservative treatment to protect against rot and decay and a waterproof treatment to prevent water ingress
Pressure Treated buildings - Require a waterproof treatment to prevent water ingress
Log Cabins/Insulated Garden Rooms - Are supplied untreated and require a preservative and waterproofing treatment.

PLEASE SCAN HERE:

ANY QUESTIONS?
Scan the QR code to contact us via our customer portal.

To apply a preservative and water proofing treatment (pressure treated products do not require a preserver), follow the manufacturer's instructions but in principle, stick to the following steps:

- ✓ Wear latex or rubber gloves, eye protection and (if spraying) a mask.
- ✓ Prepare the wood, by sanding down any ridges or inconsistencies in the wood, smoothing out knots and end-cuts.
- ✓ Choose a dry day to treat your garden building. If you're spraying rather than brushing paint on, avoid a windy day.
- ✓ Be sure you can safely reach all the sections you need to paint - and if you need a ladder, make sure it's safely positioned before climbing. Lay dust sheets around to avoid paint splatters on your base or surrounding plants.
- ✓ Tape around windowpanes to avoid smears when you're painting the frames.
- ✓ Keep pets and small children out of the way. The last thing you want is to have fur on your garden building paint, or little painted footprints all over your garden and home.
- ✓ Fill any gaps in the building's body with caulk or wood filler to prevent water and draughts getting in. Silicone based caulk is flexible and will move with the timber when temperature and humidity change. Allow to dry completely before treating. A handy tip for finding gaps is to go into your garden building and look for light leaking through joins and frames. If light gets in, then so will water.
- ✓ Liberally apply at least two coats of the treatment products with a brush or spray, taking care to allow the first coat to completely dry before applying the second.
- ✓ Make sure the solution permeates the whole of the surface area, especially around natural cracks, end cuts and nail/screw holes.

APPLY WOOD TREATMENT
IMMEDIATELY
AFTER ASSEMBLY

PLEASE SCAN HERE TO SEE TREATMENT VIDEO:

RECOMMENDED MAINTENANCE

Please retain product label and instructions for future reference

1 Perimeter

Check around the perimeter of your product to ensure there are not trees or plants that are in contact with or overhanging the building. This can affect airflow and overhanging trees, or branches can damage the roof, it is advised to keep plants at a distance.

2 Repair

Inspect the interior and exterior of the product to look for splits, cracks, and holes. Although this is a natural occurrence it can be prevented. A wood filler can be used to close the splits, cracks, and holes.

3 Roof

Check your roof regularly for tears, splits, damaged wood and fallen debris. If you notice any of this immediate repair is critical.

4 Doors & Windows

Expansion and contraction can cause doors and windows to stick or become difficult to open. Small adjustments to the hinge position can be made to the doors and windows to allow free movement.

5 Oil

Hinges can seize up over time, apply lubricant to the hinges and locks annually.

6 Screws & Bolts

It is advised to check all screws and bolts and tighten any loose you might find. For log cabins specifically the storm braces will require loosening. During humidity and temperature changes (seasons) to allow expansion and contraction to prevent gaping, twisting, popping, and warping.

7 Wash

At least once a year, give the outside of you building a good wash, to remove cobwebs, leaves, or any other dirt that may accumulate on the exterior.

8 Airing

Airing your product regularly prevents the build up of condensation which can cause the timber to rot and mould. Condensation can build up over time or daily, it is caused by a rise and fall in temperature. Leaving doors and windows open regularly can help combat the natural moisture build up.

9 Clean & Tidy

It is good practice to clean the inside and outside of your product regularly. Clear out the contents, sweep the floor, remove dirt and cobwebs. Check for areas of damp and investigate the cause to remove and prevent future occurrences. Check the ground around your product for build up of debris such as leaves, remove and ensure there is clear ventilation underneath the floor.

Additional Playhouse Maintenance:

It is recommended that the following checks and maintenance are carried out at the beginning of each season as well as at regular intervals during the usage season.

- Check all nuts /bolts/ screws for tightness and tighten when required.

- Check for movement / opening of wood giving rise to protrusion of nail heads and tips.

- Check hinges.

- Replace defective parts in accordance with the manufacturers instructions.

- Check any crossbeams, suspensions and anchors.

- If a swing is included; check the swing seat, chains and ropes.

IF THESE CHECKS ARE NOT CARRIED OUT THE ACTIVITY TOY COULD BECOME A HAZARD

MANUFACTURER'S RECOMMENDATIONS

All our garden buildings have been designed and manufactured with care and attention to be the perfect addition to your outdoor space. To ensure you do get the best out of your new garden building and to increase the longevity we advise that you follow the product instructions and our manufacturer's recommendations as detailed below. Thank you for choosing a Mercia Garden product!

1 Choosing the most suitable location for your garden building...

A minimum of 60cm should be left around the perimeter of your garden building to allow access for maintenance, annual treatment and to allow air flow around the building.

Where possible you should avoid placing your garden building underneath large trees to prevent the tree causing damage to the building.

2 Preparing the base for your garden building...

All our buildings must be built on a firm, level base to ensure the longevity of the building and prevent the wood from distorting. We recommend either concrete, concrete slabs or a wooden base, such as our 'Portabase'.

The base should be slightly smaller than the external measurement of the building, i.e. the cladding should overlap the base, creating a run off for water and preventing water from pooling underneath the building.

We also recommend that the floor of the garden building is a minimum of 25mm above the surrounding ground level to avoid flooding.

3 After installation...

Once your garden building has been installed, it will need to be treated within 14 days (weather permitting) and annually to prevent the timber from deteriorating and to waterproof it. This is required to maintain the anti-rot guarantee.

Dip Treated buildings - Require a preservative treatment to protect against rot and decay
and a waterproof treatment to prevent water ingress.
Pressure Treated buildings - Require a waterproof treatment to prevent water ingress.
Log Cabins/Insulated Garden Rooms - Are supplied untreated and require a preservative and waterproofing treatment.

We also recommend using a silicon sealant on the inside and outside of the windows as soon as possible after assembly and treatment to fully seal the windows.

Roofing felt/covering should be checked annually and replaced or fixed accordingly.

4 General maintenance and wood characteristics

As wood is a natural material it may be affected by the following:

Shrinkage and warping - The timber used in the construction of your garden building will have retained some of its natural moisture content. The moisture content of the timber will vary, depending upon prevailing environmental conditions, which will result in the components either naturally expanding or contracting. As the components dry out, shrinkage may occur. A good waterproofing treatment from the start is the best protection to minimise the effect of moisture loss/intake.

In extended periods of very warm weather getting some moisture to the building will help the overall balance. You can do this by spraying it down lightly with a garden hose. In contrast, after snow fall try to remove the snow as best as possible from the roof to prevent moisture intake and to remove the extra weight.

Top tip - using a garden brush will help you to reach the highest part of the building to remove snow and any debris left from bad weather.

Damp and mould - During the winter months, cold and damp conditions can result in an increased amount of moisture within your garden building, especially when used infrequently. Condensation can form on the timber and other items stored within your garden building. If left this moisture is likely to cause mould and mildew.

To prevent the build-up of moisture, we recommend leaving the door or windows of your building open from time to time, to allow the fresh air to circulate. We also advise against storing wet or damp items in your garden building as this will also increase the level of moisture in the building. If mould or mildew does start to form within your building we recommend using an anti-mould cleaner to remove it and to prevent it spreading, which if left untreated could permanently damage your garden building.

Splits, cracks and knots - You may notice small splits and cracks in some components or holes may appear where knots shrink and fall out. This will not affect the structure of your Garden building however, if you wish to fill them this can be easily done using any good quality wood filler.

Sap - is naturally occurring in wood and may appear in some boards of your garden building. If you wish to remove the sap, we advise waiting until it is dry and then using a sharp knife to carefully remove it. If the removal of the sap causes a hole in the timber, we recommend using a good quality wood filler to fill it.

For more handy hints and tips on how to care and maintain your garden building please refer to the MGP Customer Portal at www.mgplogistics.co.uk

Any further questions?

Contact our
Customer Service Team via the MGP
Customer Portal at:
www.mgplogistics.co.uk

WARRANTY AND GUARANTEE

Please retain product label and instructions for future reference

1 Manufacturer's Warranty

All Mercia Garden Products are supplied with a 1 year warranty on all parts against manufacturing defects.
This warranty does not cover movement, warping or splitting of timber products over time.

This warranty will be voided if any of the following occur:

1. The building has been customised or modified/adapted in any way.
2. The person claiming is not the original purchaser of the building.
3. Any damage has been caused by or as a result of misuse.
4. The building has not been maintained and cared for in accordance to our advisories and manufacturer's recommendations.
5. The building has not been treated annually or as per the manufacturer's recommendations, please ensure receipts are kept to validate this claim.
6. The building has not been erected, fitted or installed as per the supplier instructions.
7. The building has not been erected on a suitable sized firm flat, solid level concrete/slab base or placed on pressure treated bearers.
8. The building is or has been placed with 2 feet (600mm) of any obstructions (walls, trees, plants, fences etc.) which can allow moisture to penetrate the timber.
9. The roofing felt has been incorrectly fitted or damaged, allowing water ingress, or has not been properly maintained.
10. Any windows and joints have not been sealed, inside and out, with silicone or other watertight sealant.
11. Any timber has been cut, pierced or drilled without subsequent application of approved cut-end treatment.

ANTI ROT GUARANTEE 10 YEARS ANTI ROT GUARANTEE

REGISTER FOR YOUR
ANTI-ROT
GUARANTEE TODAY

PLEASE SCAN HERE:

2 Anti-rot Guarantee

Mercia Garden Products offer a 10 year anti-rot guarantee on all dip treated (a preparatory treatment) and 15 years on all pressure treated products. This guarantee covers solid timber against rot, decay, blue stain and insect attacks.
To validate the guarantee, the building must be treated (as detailed within manufacturer's recommendations) within 14 days (weather permitting) of assembly and annually thereafter.
This guarantee does not cover movement, warping or splitting of timber products over time.

This guarantee will be voided if any of the following occur:

1. The building has been customised or modified/adapted in any way.
2. The person claiming is not the original purchaser of the building.
3. Any damage is caused by or as a result of misuse.
4. The building has not been maintained and cared for in accordance to our advisories and manufacturer's recommendations.
5. The building has not been treated annually or as per the manufacturer's recommendations, please ensure receipts are kept to validate this claim.
6. The building has not been erected, fitted or installed as per the supplier instructions.
7. The building has not been erected on a suitable sized firm flat, solid level concrete/slab base or placed on pressure treated bearers.
8. The building is or has been placed with 600mm of any obstructions (walls, trees, plants, fences etc.) which can allow moisture to penetrate the timber.
9. The roofing felt has been incorrectly fitted or damaged allowing water ingress, or has not been properly maintained.
10. Any windows and joints have not been sealed, inside and out, with silicone or other watertight sealant.
11. Any timber has been cut, pierced or drilled without subsequent application of approved cut-end treatment.